Santa Cruz County Sanitation District

701 OCEAN STREET, SUITE 410, SANTA CRUZ, CA 95060-4073
(831) 454-2160 FAX (831) 454-2089 TDD/TTY- CALL 711

JOHN J. PRESLEIGH, DISTRICT ENGINEER

AGENDA

Santa Cruz County Sanitation District
Seven Hundred Twenty-ninth Regular Meeting

Thursday, September 1, 2016
4:45 P.M.

D. A. Porath Sanitation Facility
2750 Lode Street

Page #

1. **ROLL CALL**

2. **APPROVAL OF MINUTES OF AUGUST 4, 2016** ..... 2-1 thru 2-2

3. **ORAL COMMUNICATIONS**

4. **PROPOSED FINAL 2016/2017 SANTA CRUZ COUNTY SANITATION DISTRICT BUDGET:** Consider adoption of the final Santa Cruz County Sanitation District budget.

   a. Letter of the District Engineer 4-1
   b. Resolution No. 16-08, Resolution Adopting Final Budget 4-2
   c. Proposed Final 2016/2017 Santa Cruz County Sanitation District Budget .. 4-3 thru 4-13

5. **CONTRACT CHANGE ORDER NO. 4 FOR 14TH AND 16TH AVENUE PUMP STATION ABANDONMENT PROJECT**: Consider approval of Contract Change Order No. 4 compensating the contractor for extra work performed on the subject project

   a. Letter of the District Engineer ..... 5-1 thru 5-2
   b. Contract Change Order No. 4 ..... 5-3 thru 5-4

6. **NOTICE OF COMPLETION FOR 14TH AND 16TH AVENUE PUMP STATION ABANDONMENT PROJECT - CONTRACT NO. 16D3844**: Consider accepting the improvements and approving the final cost for the subject project.

   a. Letter of the District Engineer 6-1
   b. Progress Payment No. 14 - Final ..... 6-2 thru 6-3
   c. Notice of Completion 6-4

Page #

7. **REQUEST FOR STATEMENT OF QUALIFICATIONS FOR LOAN AND GRANT CONSULTING SERVICES**: Consider approving the Request for Statement of Qualifications for loan and grant consulting services.

a. Letter of the District Engineer ..... 7-1 thru 7-2
b. Proposed Letter to Consultants ..... 7-3 thru 7-4

8. **WRITTEN CORRESPONDENCE:**

a. Letters to and from the City of Santa Cruz regarding the Murray Street Bridge Seismic Retrofit Project.
i. Letter from the City of Santa Cruz, dated July 26, 2016 ..... 8-1 thru 8-6
ii. Letter to the City of Santa Cruz, dated August 2, 2016 ..... 8-7 thru 8-8
(1) Quincy Engineering Final Feasibility Study ..... 8-9 thru 8-36

9. **ADJOURNMENT TO SEPTEMBER 15, 2016**

As a courtesy to those persons affected, please attend the meeting smoke and scent free. The Santa Cruz County Sanitation District complies with the Americans with Disabilities Act (ADA). The Board of Directors Chambers is located in an accessible facility. Persons with disabilities may request a copy of the agenda in an alternative format. If you need special assistance or accommodations to attend this meeting, please contact the District at 454-2160 (TDD/TTY- CALL 711) at least 72 hours in advance of the meeting, to make arrangements. If you have a question about an agenda item, please call District staff at 454-2160. Agenda documents, including those received after the publication of these agenda materials may be reviewed at the office of the District Secretary, Room 410 of the County Government Center Building at 701 Ocean Street, Santa Cruz, California.

PROCEEDINGS OF THE BOARD OF DIRECTORS
SANTA CRUZ COUNTY SANITATION DISTRICT

August 4, 2016
4:45 P.M.

D. A. Porath Sanitation Facility
2750 Lode Street
Santa Cruz, California

* *

The seven hundred twenty-eighth regular meeting of the Board of Directors of the Santa Cruz County Sanitation District is now in session pursuant to adjournment, by declaration of Chairperson Harlan.

PRESENT: Director Friend, Chairperson Harlan, District Counsel, and the Secretary

ABSENT: Director Leopold

APPROVAL OF MINUTES OF JUNE 9, 2016 -approved

Upon motion of Director Friend, duly seconded by Chairperson Harlan, it is ordered by the Board, by unanimous voice vote, with Director Leopold being absent, that the minutes of June 9, 2016, be and are hereby approved.

ORAL COMMUNICATIONS - none

SANTA CRUZ COUNTY SANITATION DISTRICT -2016-2020 CAPITAL IMPROVEMENT PROGRAM -accepted and filed

The District Engineer, John Presleigh, explains the subject item and recommends that the Board accept and file the Santa Cruz County Sanitation District Capital Improvement Program (CIP) report. Board members compliment the work done on the CIP, which was coordinated and put together mainly by deputy secretary, Terra Prestwich, this year. Board and staff discussion ensues regarding the various projects in the report.

Upon motion of Director Friend, duly seconded by Chairperson Harlan, it is ordered by the Board, by unanimous voice vote, with Director Leopold being absent, that the Santa Cruz County Sanitation District Capital Improvement Program report, be and is hereby accepted and filed.

CONFLICT OF INTEREST CODE BIENNIAL REVIEW -approved

Mr. Presleigh explains the subject item and recommends that the Board determine that the District's present Conflict of Interest Code is accurate and does not need to be amended.

Upon motion of Director Friend, duly seconded by Chairperson Harlan, it is determined by the Board, by unanimous voice vote, with Director Leopold being absent, that the Santa Cruz County

Sanitation District's present Conflict of Interest Code is accurate and does not need to be amended. Further, the District Engineer is authorized to sign the 2016 Local Agency Biennial Notice on behalf of the District, and District staff is directed to bring said Conflict of Interest Code back for review by the Board in two years.

SUSTAINABLE GROUNDWATER MANAGEMENT PROGRAM AVAILABILITY OF WASTEWATER -authorized

Mr. Presleigh explains the subject item and recommends that the Board authorize the District Engineer to sign a letter regarding the availability of the District's wastewater to aid in the replenishment of the Santa Cruz Mid-County Groundwater Basin. Chairperson Harlan states that she thinks all options should be looked into and the more options the better.

Upon motion of Director Friend, duly seconded by Chairperson Harlan, it is ordered by the Board, by unanimous voice vote, with Director Leopold being absent, that the District Engineer is hereby authorized to sign a letter regarding the availability of the Santa Cruz County Sanitation District's wastewater to aid in the replenishment of the Santa Cruz Mid-County Groundwater Basin.

SEWAGE SPILL REPORT

The Board reviews the following sewage spill report transmitted to the California Regional Water Quality Control Board, Central Coast Region:

- 171 Fourteenth Avenue

WRITTEN CORRESPONDENCE

The Board reviews the following written correspondence:

A letter and report from S&P Global Ratings (a division of Standard & Poor's Financial Services LLC), stating that, based on their review, they have raised the District's credit rating from "AA" to "AA+" while affirming a stable outlook.

ORAL COMMUNICATIONS - none

ADJOURNMENT

There being no further business to come before the Board, Chairperson Harlan hereby adjourns this meeting of the Board to the next scheduled meeting, to be held Thursday, August 18, 2016, at 4:45 p.m., at the D. A. Porath Sanitation Facility meeting room, 2750 Lode Street, Santa Cruz, California.

2-2 District Secretary

Santa Cruz County Sanitation District

701 OCEAN STREET, SUITE 410, SANTA CRUZ, CA 95060-4073
(831) 454-2160 FAX (831) 454-2089 TDD: (831) 454-2123

JOHN J. PRESLEIGH, DISTRICT ENGINEER

AGENDA DATE: SEPTEMBER 1, 2016

BOARD OF DIRECTORS
SANTA CRUZ COUNTY SANITATION DISTRICT
701 Ocean Street, Room 410
Santa Cruz, California 95060

SUBJECT: ADOPTION OF 2016/2017 FINAL BUDGET

Members of the Board:

Attached is the Santa Cruz County Sanitation District final budget for fiscal year 2016/2017. This budget has been adjusted to include the fiscal year 2015/2016 year end revenues, expenditures and fund balances. Encumbrance carry-overs were rebudgeted, increasing the appropriations accordingly.

It is therefore recommended that your Board take the following action:

1. Approve the 2016/2017 final budget as presented;

2. Adopt the attached resolution adopting the final budget.

Yours truly,

JOHN J. PRESLEIGH
District Engineer

KE:tlp/b1828

Attachment

Copy to: Auditor-Controller
Business Services

BEFORE THE BOARD OF DIRECTORS
OF THE SANTA CRUZ COUNTY SANITATION DISTRICT
SANTA CRUZ COUNTY, CALIFORNIA

RESOLUTION NO. 16-08

On the motion of Director
duly seconded by Director
the following resolution is adopted:

RESOLUTION ADOPTING FINAL BUDGET

WHEREAS, the Board of Directors of the Santa Cruz County Sanitation District held a public hearing on its proposed budget on June 9, 2016, after duly published notice, and

WHEREAS, said hearings have been terminated, during which time all additions and deletions to the proposed budget for 2016/2017 were made or authorized, and

NOW THEREFORE, IT IS HEREBY RESOLVED the final budget of the Santa Cruz County Sanitation District for which the Board of Directors is the governing board, for the fiscal year 2016/2017 be and is hereby adopted by reference to the attached final budget.

BE IT FURTHER RESOLVED that the District Engineer is authorized, as follows, to approve changes in equipment classification of fixed asset acquisitions as to quantity, type, and cost as long as the original total budget unit amounts approved by the Board of Directors are not exceeded:

1. Substitution or other items shall be limited to items of original appropriation of $1,000 or less with a substitution cost not to exceed a unit cost of $1,000.

2. Original items unit cost can be increased up to 15 percent provided that appropriation savings are available within the expenditure subobject. Changes in items costing more than that will continue to be approved by the Board of Directors regardless of amount.

BE IT FURTHER RESOLVED that the means of financing the expenditure programs will be by monies derived from revenue to accrue and fund balance available, and they are attached hereto and made a part hereof (on file with the District Secretary).

PASSED AND ADOPTED by the Board of Directors of the Santa Cruz County Sanitation District this1st day of September, 2016, by the following vote:

AYES: DIRECTORS
NOES: DIRECTORS
ABSENT: DIRECTORS

_____
Chairperson of said Board

ATTEST: _____
Secretary of said Board

Approved as to Form:

_____
District Counsel

KE:tlp/16-08
Distribution: Auditor-Controller
Business Services
Sanitation Engineer

4-2

FINAL 2016/2017 BUDGET

SANTA CRUZ COUNTY SANITATION DISTRICT

Public Hearing
4:45 p.m., June 9, 2016
D. A. Porath Sanitation Facility
2750 Lode Street, Santa Cruz, California

Final Adoption: September 1, 2016

4-3

SANTA CRUZ COUNTY SANITATION DISTRICT
ADOPTED BUDGET 2016/2017

625175 SCCSD OPERATING FUND (50/175)

The Operating Fund is responsible for funding the expenses for the general operations of the District. No sewer connection fee revenue can be used to fund these operations

EXPENDITURES:				14/15 Actual	15/16 Actual	16/17 Recommended	16/17 Adopted
P53166	62330	SCCSD-Sewage Treatment - City Of Santa Cruz	Engr	3,861,418	4,431,906	6,278,000	6,278,000
Maintenance and Operations:							
P53107	62330	Public Outreach	Opns	28,826	36,408	50,000	50,000
P53110	62330	Permit Reviews	Opns	2,120	1,469	6,000	6,000
P53113	62330	Spill Response-Private Prop	Opns	1,396	1,610	10,000	10,000
P53115	62330	Spill Response-Main Sewer Spill	Opns	416	3,935	15,000	15,000
P53128	62330	Pump Stations	Opns	1,404,318	1,650,262	1,625,000	1,648,023
P53130	62330	Collection System	Opns	1,890,569	2,128,823	1,850,000	1,850,000
P53132	62330	East Cliff Facility	Opns	1,400,256	1,403,850	1,300,000	1,300,000
P53133	62330	Electrical	Opns	1,267,904	1,683,371	1,800,000	1,814,740
P53136	62330	Sulfide Control	Opns	902,610	945,354	900,000	900,000
P53138	62330	Utilities	Opns	678,242	787,872	750,000	750,000
P53140	62330	Tree Trimming	Opns	26,789	7,040	30,000	30,000
P53142	62330	Source Control Lab Work	Opns	14,161	19,152	22,000	22,000
P53143	62330	Emergency - Sewer Repair Wharf Rd	Opns	-	17,083	-	-
P53174	62330	Source Control Program	Opns	371,372	378,082	422,000	422,000
P53190	62330	Infiltration/Inflow Reduction	Both	-		40,000	40,000
P53193	62330	Green Business Program	Opns	94,861	104,096	120,000	120,000
P53194	62330	Operations Lab Work	Opns	4,145	12,651	15,000	15,000
P53195	62330	Annual Cathodic Protection Testing & Repairs	Opns	25,652	17,006	30,000	50,000
P53198	62330	Permit Fees	Opns	29,373	23,822	40,000	40,000
Engineering:							
Various	62330	Permit Reviews	Engr	8,819	12,253	10,000	10,000
P53164	62330	General Engineering	Engr	1,291,255	1,494,871	1,500,000	1,506,559
P53168	62330	Service Charge Administration	Engr	89,750	139,685	90,000	90,000
Salaries and Wages:				-			
P53102	62330	Salaries-Secretaries	Engr	127,151	121,406	150,000	150,000
P53104	62330	Salaries-Directors	Engr	4,232	4,400	5,500	5,500
Miscellaneous:							
P53105	62330	Printing & Mailing	Engr	8,615	15,328	20,000	20,000
P53106	62330	Office Expenses	Engr	7,258	24,717	16,000	16,000
P53108	62330	Telephone & Communications	Engr	26,958	40,921	30,000	30,000
P53170	62330	Accounting & Audit Fees	Engr	6,456	9,570	15,000	15,000
P53178	62330	Legal Costs & Fees	Engr	86,162	111,278	70,000	70,000
P53182	62330	Travel & Transportation	Both	2,993		2,500	2,500
P53171	62330	IRWM Coordination	Engr	-		15,000	15,000
P53188	62330	Codification Of Ordinances	Engr	-		5,000	5,000
P53196	62330	Revenue Study	Engr	16,682	8,085	25,000	25,000
Computers:							
P53180	62330	Systems & Programming	MIS	18,496	25,135	20,000	20,000
P53186	62330	Computers-Software	MIS	148,999	139,410	150,000	150,859
P53192	62330	Computers-Facility Computer Mapping	MIS	41,880	26,091	30,000	30,000
Routine Equipment Repair & Replacement:				-			
P53152	62330	East Cliff Pump Station and Line Equip	Opns	149,311	135,713	150,000	150,000
Fixed Assets:							
See Pg2	86204	Equipment		57,877	89,254	285,000	285,000
See Pg2	86209	Mobile Equipment		43,957	164,406	200,000	200,000
Contingencies:							
53499	98700	Contingencies		-	-	50,000	50,000
TOTAL EXPENDITURES				14,141,277	16,216,313	18,142,000	18,207,181
SOURCE OF FUNDS:							
	344	Fund Balance		169,266	2,191,992	1,843,046	1,572,915
	40894	State-Other Grants		-	27,000	-	-
	41322	Plan Checking Fees		15,043	7,313	10,000	10,000
	42047	Other Charges Current Services		6,282	2,408	5,000	5,000
	42384	Other Revenues, Transfers and Adjustments		274	6,270	12,000	12,000
	42450	Sales of Fixed Assets-Non Taxable		84,529	600	5,000	5,000
	42462	Transfer from Revenue Trust		15,682,044	15,553,645	16,266,954	16,602,266
AVAILABLE FUNDS				15,957,438	17,789,228	18,142,000	18,207,181

Engr = Engineering
Opns = Operations
Both = Engineering & Operations
MIS = Management Information Services

4-4

SANTA CRUZ COUNTY SANITATION DISTRICT
ADOPTED BUDGET 2016/2017

625175 SCCSD OPERATING FUND - SCHEDULE OF FIXED ASSETS

					14/15 Actual	15/16 Actual	16/17 Recommended	16/17 Adopted
Equipment								
P53226	86204	Emergency Diesel Generators (4)	R	Opns	-	21,225	90,000	90,000
P53240	86204	Network Equipment	R	MIS	41,604		50,000	50,000
P53246	86204	Motorized Valves	N	Opns	7,600		40,000	40,000
P53248	86204	Gas Detectors	N	Opns	8,673		45,000	45,000
P53257	86204	Security Cameras & Screen	R	Opns	-		15,000	15,000
P53266	86204	Gasboy Fuel Management System	R	Opns	-	27,612	25,000	25,000
P53227	86204	Hoisting Equipment HJHGK	R	Opns	-	40,417	20,000	20,000
Subtotal					57,877	89,254	285,000	285,000
Mobile Equipment								
P53293	86209	F250 Super Duty Truck w/service body	R	Opns	-	60,619	100,000	100,000
P53296	86209	SVC Body for F-250	R	Opns	16,665		10,000	10,000
P53295	86209	Hybrid Vehicle	R	Engr	27,292		-	-
P53288	86209	F250 4WD Super Duty Truck w/service bo	R	Opns	-	70,622	90,000	90,000
P53297	86209	Nissan Leaf Electric Vehicles	N	Opns		33,165	-	-
Subtotal					43,957	164,406	200,000	200,000
TOTAL					101,833	253,660	485,000	485,000

N = New
R = Replacement
E = Existing

4-5

SANTA CRUZ COUNTY SANITATION DISTRICT
ADOPTED BUDGET 2016/2017

625195 SCCSD WASTEWATER CAPITAL IMPROVEMENT FUND (50/195)

The Wastewater Capital Improvement fund is required by the provisions of the Clean Water Grants we accepted to build the East Cliff and Aptos Transmission Projects. The fund receives cash, which represents the depreciation on the facilities constructed with Clean Water grant funds. These funds are accumulated so that the facilities can be repaired or reconditioned to insure continued use.

EXPENDITURES:				14/15 Actual	15/16 Actual	16/17 Recommended	16/17 Adopted
P54050	90000	Transfer To Revenue Trust Fund (625205)		4,625,224	-	-	-
P54050	90000	Transfer To Construction Fund (136409)		-	-	400,000	400,000
P54043	90000	Rio Del Mar Esplanade Paving	Engr	79,792	-	-	-
P54002	86110	Lode St - Facility Improvements	Opns	6,064	-	15,000	15,000
P54004	86110	Lode St - Butterfly Habitat Plan	Engr	3,130	4,258	10,000	10,000
P54005	86110	Transmission Line Inspection	Both	88,616	16,427	-	70,857
P54006	86110	Basin Flow Monitoring Program	Engr	138,091	71,942	200,000	244,560
P54009	86110	Lode St - HVAC, Electrical, Plumbing & Structural	Comp	-	6,490	50,000	50,000
P54018	86110	Flow Meter Replacement & Repairs	Opns	7,617	19,112	250,000	256,535
P54023	86110	SCADA System Improvements	Opns	30,996	165,207	150,000	150,000
P54025	86110	Aptos (New Brighton) Transmission Line Relocation	Engr	6,416	8,639	50,000	101,876
P54038	86110	Pump Station Sewage Level Monitoring Imprvmnt	Opns	-	6,776	25,000	25,000
P54040	86110	New Brighton Beach Pipe Removal		-	-	-	-
P54041	86110	Concrete Repairs at Various Pump Stations	Engr	64,695	261	450,000	486,827
P54046	86110	Hidden Beach Pump Station Manhole Rehabilitation	Engr	16,931	-	150,000	150,000
P54047	86110	San Lorenzo River Transmission Main Replacement	Engr	2,483	-	-	-
P54048	86110	Santa Cruz Harbor Transmission Main Rehabilitation	Engr	46,886	255,668	350,000	403,017
P54051	86110	Soquel Pump Station Force Main Replacement	Engr	207,690	183,998	6,100,000	6,335,415
P54052	86110	Neary Lagoon Force Main Rehabilitation	Engr	156,810	841,608	150,000	1,243,588
P54054	86110	DA Porath Facillity Wet Weather Retention Basin	Engr	126,982	718,968	-	697,564
1055	86110	East Cliff Transmission Repairs/Replacement	Engr	7,188	2,852	-	260,366
P54057	86110	Lode Street Transformer Replacement	Opns	-	-	40,000	40,000
New	86110	Capitola / Jewel Box Sewer Improvements	Engr	-	-	100,000	100,000
New	86110	Hidden Beach Way Sewer Extension	Engr	-	-	300,000	300,000
P54099	86110	Wastewater Capital Reserves		-	-	103,178	178,138
TOTAL EXPENDITURES				5,615,611	2,302,213	8,893,178	11,518,742
SOURCE OF FUNDS:							
	0344	Fund Balance		9,676,714	4,139,958	286,815	4,762,986
	40894	SWRCB Prop 40		-		1,976,731	1,976,731
	42384	Other Revenue		660		-	-
	42506	Loan Proceeds		-		4,000,000	4,000,000
	42462	Transfer from Revenue Trust Fund		-	2,652,033	2,629,632	779,025
AVAILABLE FUNDS				9,677,374	7,065,199	8,893,178	11,518,742

Comp = Complete
Del = Deleted
U/C = Under Construction
HVAC = Heating, Ventilation & Air Conditioning
SCADA = Supervisory Control & Data Acquisition
VFD = Variable Frequency Drive

4-6

SANTA CRUZ COUNTY SANITATION DISTRICT
ADOPTED BUDGET 2016/2017

136409 SCCSD CONSTRUCTION IMPROVEMENT FUND (50/185)

The Construction Improvement Fund was established to construct needed improvements in the District.

EXPENDITURES:				14/15 Actual	15/16 Actual	16/17 Recommended	16/17 Adopted
P53861	75235	Contributions to the Road Fund	Engr	217,000	500,000	200,000	200,000
P53802	86110	Pump Station Repair/Modifications	Opns	8,363	-	50,000	76,329
P53804	86110	Cathodic Protection Construction	Opns	196,939	8,135	-	2,166
P53805	86110	Seacliff A1 Pump Station Electrical Improvements	Engr	1	-	-	-
P53807	86110	Aptos Village Sewer Rehab	Engr	3,839	-	-	6,960
P53812	86110	Minor Projects	Engr	73,085	-	350,000	350,000
P53613	86110	Electrical Panel Upgrades At Various Pump Stations	Opns	89,449	206,726	150,000	150,820
P TBD	86204	Hoisting Equipment	R	-	-	-	-
P53817	86110	Consulting Engineering Services	Engr	2,023	40,127	100,000	239,015
P53822	86110	Pump Station Tank Removal	Opns	3,892	-	-	600
P53823	86110	E Cliff Dr Force Main Replacement	Engr	-	1,242	-	-
P53834	86110	Submersible Pump Station Hatch Installation	Opns	-	-	50,000	50,000
P53640	86110	Road/Trench Repairs	Engr	-	4,149	200,000	200,000
P53844	86110	Access Road Clearing & Construction (3 Loc)	Opns	-	-	-	-
P53856	86110	Manhole Construction/Replacement Project-Twin Lakes	Opns	-	7,366	250,000	250,000
P53858	86110	Capitola Area Improvements	Engr	-	50,728	-	-
P53859	86110	16Th Ave & 46Th Ave Sewer Project	Engr	-	2,875	-	-
P53866	86110	14Th & 16Th Avenues Pump Station Abandoments	Engr	116,804	3,145,703	100,000	315,429
P53869	86110	Soquel & Aptos Basins I/I Study	Engr	-	-	-	-
P53870	86110	Valencia Creek Sewer Relocation	Engr	92,842	-	2,200,000	2,225,202
P53875	86110	Soquel Dr Bridge Sewer Replacement-Rodeo Gulch	Engr	-	-	-	-
P53876	86110	Upper Rodeo Gulch Trunkline & Soquel Sewer Brdige Repl	Engr	90,137	1,307	100,000	161,030
P53878	86110	Moran Pump Station Upgrade	Engr	386,660	19,730	-	9,261
P53879	86110	Paul Sweet Road Sewer Relocation	Engr	218	1,171	-	-
P53880	86110	East Cliff & Schwann Lake Drives Sewer Repl (Design)	Engr	-	-	-	14,378
P53881	86110	East Cliff, Portola & Richmond Drives Sewer Replacement	Engr	-	-	-	-
382	86110	Coast View Drive Sewer Replacement (Design)	Engr	-	-	-	-
3884	86110	Trunkline Right Of Way	Opns	7,508	38,341	-	-
P53886	86110	Borregas Gulch Trunkline Replacement - Phase I	Engr	45,840	75,269	2,050,000	2,081,813
P53892	86110	Arana Trunkline Design	Engr	-	-	50,000	50,000
P53894	86110	Felt St & 17th Sewer Replacement	Engr	6,339,450	333,484	-	252,659
P53895	86110	Grove Lane & Waugh Lift Station & Sewer	Engr	-	-	-	-
P53897	86110	Noble Gulch Trunkline Relocation	Engr	5,587,420	5,408,736	200,000	342,616
P53898	86110	Park Avenue & Wesley Street Sewer	Engr	1,362	39,895	-	3,299
P53999	98700	Contingencies		-	-	200,000	100,000
TOTAL EXPENDITURES				13,262,831	9,884,983	6,250,000	7,081,576
SOURCE OF FUNDS:							
	0344	Fund Balance		10,953,899	4,460,713	-	(412,731)
	40894	ST-Other		-	1,559,016	-	-
	42384	Other Revenue		460	-	-	-
	42506	Loan Proceeds		-	-	-	-
	42506	Loan Proceeds - SRF for Valencia (53870)		-	-	2,000,000	2,000,000
	42506	Loan Proceeds - SRF for Borregas (53886)		-	-	2,000,000	2,000,000
	42462	Transfer from WasteWater Cap Improvement Fund		-	-	400,000	400,000
	42462	Transfer from Revenue Trust		7,489,864	3,452,523	1,850,000	3,094,307
AVAILABLE FUNDS				18,444,223	9,472,252	6,250,000	7,081,576

4-7

SANTA CRUZ COUNTY SANITATION DISTRICT
ADOPTED BUDGET 2016/2017

625210 SCCSD TREATMENT PLANT FUND (50/210)

The Treatment Plant Fund was originaly established to receive proceeds from the sale of certificates of participation to finance the District's share of the secondary treatment plant construction project by the City of Santa Cruz which was completed in fiscal year 2001-02. The fund is now used for payment of the debt service relating to this project.

In December of 2013 the city of Santa Cruz refinanced this debt. Accrued interest and debt restructuring costs of $144,178 were added to the new principle balance and the interest rate was redued from 2.8% to 1.6% for a net savings of approximately $207,000 over the life of the debt.

The SRF Loan principle balance was $6,088,299 at June 30, 2015 and the debt will be retired in 2019.

EXPENDITURES:	14/15 Actual	15/16 Actual	16/17 Recommended	16/17 Adopted
54603 74110 SRF Loan Principle Payment - Secondary Plant	144,657	1,484,348	1,508,192	1,508,192
54604 74425 SRF Loan Interest Payment - Secondary Plant	131,189	91,499	67,655	67,655
TOTAL EXPENDITURES	275,847	1,575,847	1,575,847	1,575,847

SOURCE OF FUNDS:

0344 Fund Balance	-		-	(311)
42462 Transfer from Revenue Trust	1,575,534	1,575,536	1,575,536	1,575,847
40430 Interest	-	-	311	311
AVAILABLE FUNDS	1,575,534	1,575,536	1,575,847	1,575,847

F = State Revolving Fund

4-8

SANTA CRUZ COUNTY SANITATION DISTRICT
ADOPTED BUDGET 2016/2017

136418 SCCSD 2005 WASTEWATER REVENUE REFUNDING BOND DEBT SERVICE FUND (33/141)

This fund was established to receive the transfers from the Revenue Trust for the payment of principal and interest to repay the money borrowed to refinance the 1977 Revenue Bonds and the 1994 Certs Bonds. The Wastewater Revenue Refunding Bond had a principle balance of $3,070,000 at June 30, 2015 and the debt will be retired in 2019.

EXPENDITURES:			14/15 Actual	15/16 Actual	16/17 RECOMMENDED	16/17 Adopted
30250	74105	Principal	840,000	890,000	940,000	940,000
30251	74310	Interest	162,557	125,400	107,600	105,962
30200	62345	Paying Agent Fees	5,120	9,215	4,965	4,965
TOTAL EXPENDITURES			1,054,740	1,024,615	1,052,565	1,050,927

SOURCE OF FUNDS:

	0344	Fund Balance (Restricted)	44,660	24	-	964
	40430	Interest	467	(2,086)	500	500
	40430	Interest accrued on US Bank Rev Ref Bond Reserve		46,460	44,460	44,460
	42462	Transfer from Revenue Trust	1,009,618	981,181	1,007,605	1,005,003
AVAILABLE FUNDS			1,054,745	1,025,579	1,052,565	1,050,927

4-9

SANTA CRUZ COUNTY SANITATION DISTRICT
ADOPTED BUDGET 2016/2017

625177 SCCSD CLEAN WATER STATE REVOLVING FUND DEBT SERVICE FUND (50/177)

This fund was established during the 2011/12 fiscal year to receive the transfers from the Revenue Trust for the payment of principal and interest to repay the money borrowed through the Clean Water State Revolving Fund, Finance Agreement No. 09-848-550-0. The final principal balance will be determined once the final distribution has been made. The principal balance is currently $10,836,924 at June 30, 2015 and the debt will be retired in 2032.

EXPENDITURES:			14/15 Actual	15/16 Actual	16/17 Recommended	16/17 Adopted
54610	74110	Principal	506,722	519,390	532,374	532,374
54611	74310	Interest	283,591	270,923	257,938	257,938
TOTAL EXPENDITURES			790,313	790,313	790,313	790,313

SOURCE OF FUNDS:

0344	Fund Balance (Restricted)	821	821	2,060	2,057
40430	Interest	-	1,388	1,000	1,000
42462	Transfer from Revenue Trust	789,646	790,160	787,253	787,256
AVAILABLE FUNDS		790,467	792,369	790,313	790,313

4-10

SANTA CRUZ COUNTY SANITATION DISTRICT
ADOPTED BUDGET 2016/2017

136419 SCCSD 2005 WASTEWATER REVENUE REFUNDING BOND DEBT RESERVE FUND (33/142)

This fund was established as a condition of the sale of the 2005 Wastewater Revenue Refunding Bonds in March 2005. It is required to insure that funds will always be available to make timely payments on the 2005 bonds.

EXPENDITURES:

Reserves	969,937

SOURCE OF FUNDS:

Fund Balance	969,937

4-11

SANTA CRUZ COUNTY SANITATION DISTRICT
ADOPTED BUDGET 2016/2017

625205 SCCSD REVENUE TRUST (50/205)

The Revenue Trust was created to receive the general revenue for Santa Cruz County Sanitation District. It makes payments to the Debt Service, Operating, Wastewater Capital Improvement and Construction Improvement Funds twice a year.

EXPENDITURES:			14/15 Actual	15/16 Actual	16/17 Recommended	16/17 Adopted
Transfers to:						
54500	90000	Operating Fund (625175)	15,682,044	15,553,645	16,266,954	16,602,266
54500	90000	Wastewater Capital Improvement Fund (625195)	-	2,652,033	2,629,632	779,025
54500	90000	Construction Improvement Fund (136409)	7,489,864	3,452,523	1,850,000	3,094,307
54500	90000	Treatment Plant Fund (625210)	1,575,534	1,575,536	1,575,536	1,575,847
54500	90000	2005 Debt Service Fund (136418)	1,054,297	981,181	1,007,605	1,005,003
54500	90000	Clean Water State Revolving Fund loan (625177)	789,646	790,160	787,253	787,256
TOTAL EXPENDITURES			26,591,385	25,005,078	24,116,979	23,843,705

SOURCE OF FUNDS (FOR TRANSFERS):

0344	Beginning Fund Balance (Unrestricted)	4,246,905	4,866,765	3,707,980	3,434,705
	Revenues				
40430	Interest	105,292	97,941	100,000	100,000
41841	Disctrict Buy-In Connection Fees	5,200	3,000	-	-
41842	Connection Fees	170,960	194,900	250,000	250,000
41866	Sewer Service Charges	22,213,013	23,277,176	23,559,000	23,559,000
42384	Other Revenues	124		-	
42462	Transfer from Wastewater Capital Improvement (625195)	4,625,224		-	
42462	Transfer from Rate Stabilization Fund	91,744	-	-	
	Revenues Subtotal	27,211,558	23,573,018	23,909,000	23,909,000
SOURCE OF FUNDS SUBTOTAL		31,458,463	28,439,783	27,616,980	27,343,705
	Reserves	-		(3,500,000)	(3,500,000)
AVAILABLE FUNDS		31,458,463	28,439,783	24,116,980	23,843,705

4-12

SANTA CRUZ COUNTY SANITATION DISTRICT
ADOPTED BUDGET 2016/2017

USES OF FUNDS		16/17 Adopted
Expenditures		
625175	Operating Fund	18,207,181
625195	Wastewater Capital Impr Projects	11,340,604
136409	Construction Improvement Fund	7,081,576
625210	Secondary Treatment Plant Fund	1,575,847
136418	2005 Bond Debt Service	1,050,927
625177	Clean Water State Revovling Fund DS	790,313
	Total Expenditures	40,046,447
Reserves		
625195	Wastewater Capital Improvement	178,138
625205	Revenue Trust	3,500,000
	Total Reserves	3,678,138
TOTAL EXPENDITURES AND RESERVES		43,724,585

SOURCES OF FUNDS		
Fund Balances		
625175	Operating Fund	1,572,915
625195	Wastewater Capital Improvement	4,762,986
136409	Construction Improvement Fund	(412,731)
625210	Secondary Treatment Plant Fund	(311)
136418	2005 Wastewater Revenue Refunding DS	964
625177	Clean Water State Revolving Fund DS	2,057
625205	Revenue Trust	3,434,705
	Total Fund Balance	9,360,584
Revenues		
625175	Plan Checking Fees	10,000
625175	Other Charges Current Services	5,000
625175	Other Revenues, Transfers and Adjustments	12,000
625175	Sale of Fixed Assets	5,000
625195	SRF Prop 40 & Prop 50 Grants	1,976,731
625195	Loan Proceeds	4,000,000
136409	ST-Other	-
136409	Loan Proceeds	4,000,000
136409	Transfer from WasteWater Cap Improvement Fund	400,000
625210	Interest	311
136418	Interest	500
136418	Accrued Interest on US Bank Bond Reserve	44,460
625177	Interest	1,000
625205	Interest	100,000
625205	Connection Fees	250,000
625205	Sewer Service Charges	23,559,000
	Total Revenues	34,364,001
TOTAL FUND BALANCES AND REVENUES		43,724,585
DIFF THIS SCHEDULE		0

4-13

Santa Cruz County Sanitation District

701 OCEAN STREET, SUITE 410, SANTA CRUZ, CA 95060-4073
(831) 454-2160 FAX (831) 454-2089 TDD/TTY- CALL 711

JOHN J. PRESLEIGH, DISTRICT ENGINEER

AGENDA DATE: SEPTEMBER 1, 2016

BOARD OF DIRECTORS
SANTA CRUZ COUNTY SANITATION DISTRICT
701 Ocean Street, Room 410
Santa Cruz, California 95060

SUBJECT: 14TH AND 16TH PUMP STATION ABANDONMENT PROJECT
CONTRACT NO. 16D3844
CONTRACT CHANGE ORDER NO. 4

Members of the Board:

The subject project included abandonment and removal of the existing 14th and 16th Avenues pump stations; new gravity sewer lines; construction of a new, upgraded 15th Avenue pump station; installation of a new force main from the 15th Avenue pump station to the East Cliff Dive sewer trunk line; and abandonment and removal of the existing 15th Avenue pump station.

During construction certain bid items were reduced or eliminated from the project including, deletion of portions of the gravity sewer, force main, and a gravity sewer lateral. These changes resulted in a credit of $17,181.00.

Also, several items of work were either increased or added to the scope of the project including, two residential private grinder pump stations on 14th Avenue, a finishing top slab and handrail on the abandoned 16th Avenue pump station structure (located on Geoffroy Drive), additional work for abandoning the 14th and 16th Avenue pump station water services, additional paving in East Cliff Drive at the intersection of 15th Avenue, abandonment of the manhole at the end of 15th Avenue, and installation of two parking stops between the new 15th Avenue pump station control panel and generator. The associated increase in costs for this extra work was $73,082.29.

Sufficient funds are available within the project contingencies for the above construction changes.

It is therefore recommended that your Board take the following actions:

1. Approve Contract Change Order No. 4 in the amount of $55,901.29;

2. Authorize the Chairperson of the Board to sign the change order on behalf of the Board; and

3. Direct the District Secretary to process said Contract Change Order and take related actions.

Yours truly,

JOHN J. PRESLEIGH
District Engineer

MBS : dls/b1831

Attachment – Contract Change Order #4

SANTA CRUZ COUNTY SANITATION DISTRICT

CONTRACT CHANGE ORDER NO. 4 **REV. NO.** 1 **SUPPL. NO.**
CONTRACT 14TH AND 16TH AVENUE PUMP STATION ABANDONMENT PROJECT Sheet 1 of 2 Sheets
PUBLIC WORKS JOB NO. 58366 **CONTRACT NO.** 16D3844 ~~CW53844~~

T/C	R F	DOC REF	INDEX	SUBOBJECT	PRJ/UCD	VENDOR	AMOUNT
SUBSID			DESCRIPTION				

To: ANDERSON PACIFIC ENGINEERING CONSTRUCTION, INC. Contractor

You are hereby directed to make the herein described changes from the plans and specifications or do the following described work not included in the plans and specifications on this contract. NOTE: This change order is not effective until approved by the Board of Directors.

Description of work to be done, estimate of quantities, and prices to be paid. Segregate between additional work at contract price, agreed price, and force account. Unless otherwise stated, rates for rental of equipment cover only such time as equipment is actually used and no allowance will be made for idle time.

Change requested by SANITATION ENGINEERING

The last percentage shown is the net accumulated increase or decrease from the original quantity in the Engineer's Estimate.

ESTIMATE OF DECREASE IN CONTRACT ITEMS AT CONTRACT UNIT PRICES AND INCREASE IN EXTRA WORK AT FORCE ACCOUNT AND AGREED LUMP SUM

Estimate of Decrease in Contract Items at Contract Unit Prices:

1) The following Bid Items had underruns resulting in a decrease in Contract amount. The following Bid Items are reduced as follows:

Item No. 6 – 8" Sewer (PTGAB): 13 LF @ $672 = $8,736
Item No. 7 – 6" Force Main (Open Trench): 25 LF @ $165 = $4,125
Item No. 17 – Sewer Lateral: 24 LF @ $180 = $4,320

Total Estimate of Decrease in Contract Items at Contract Unit Prices: ($17,181.00)

Estimate of Increase in Item No. 23 – Extra Work

2) Due to a bust in the elevation indicated on the Contract Drawings, the lateral for the residence at 175 14th Avenue is located below the new gravity sewer line on 14th Avenue. Private grinder stations were purchased under CCO's 2 and 3 for this residence and also the State Park's house located at 171 14th Avenue. This change order is for the cost to install these two grinder stations. Costs were tracked on a time and materials basis.

Total cost for this item: $46,286.11

3) The Contract Drawings indicate demolishing the 16th Avenue Pump Station superstructure, while leaving the subsurface structure in place. However, the remaining structure had an uneven grade and no handrail protection. This change order is for the cost to install a topping slab to provide an even surface grade and handrail necessary for public safety.

Total negotiated lump sum: $12,617.71

4) Each of the abandoned pump stations at 14th and 16th Avenue had existing water service lines and backflow preventers. The City Water Department required that rather than just capping the lines as indicated on the Contract Drawings, the service lines needed to be abandoned at the water main, and the backflow preventers and meters removed. This work was completed on a time and materials basis.

Total cost for this item: $3714.09

5) An approximately 470 square foot paving digout was required in the east-bound lane of East Cliff Drive due to the poor existing condition of the AC. This work was completed on a time and materials basis.

Total cost for this item: $6,566.57

CONTINUED ON SHEET 2

DISTRIBUTION: SECRETARY OF THE BOARD CONTRACTOR FISCAL OFFICER AUDITOR-CONTROLLER RESIDENT ENGINEER PROJECT FILE

SANTA CRUZ COUNTY SANITATION DISTRICT

CONTRACT CHANGE ORDER NO. 4 **REV. NO.** 1 **SUPPL. NO.**
CONTRACT 14TH AND 16TH AVENUE PUMP STATION ABANDONMENT PROJECT Sheet 2 of 2 Sheets
PUBLIC WORKS JOB NO. 58366 **CONTRACT NO.** 16D3844 ~~CW53844~~

6) The section of existing pipeline between existing Manhole EO57 and new Manhole A-1 had a sag in it that was resulting in negative flow. This section of sewer is no longer needed due to the upcoming development on the adjacent private property. Therefore, this section of existing sewer line was drained and permanently plugged at Manhole A-1, and Manhole EO57 was filled with slurry and abandoned below grade. This work was completed on a time and materials basis.

Total cost for this item: $3,360.25

7) The area between the new 15th Avenue Pump Station and new permanent generator had previously been protected by a wood railroad tie. With the concrete restoration that was completed under CCO 3, it was determined that rather than reinstall the railroad tie that had been removed, concrete parking stops would provide better protection of the area. This work was completed on a time and materials basis.

Total cost for this item: $537.56

Total Estimate of Increase in Extra Work: $73,082.29

Estimated Cost Decrease **or Increase** **$55,901.29**

By reason of this order the time of completion will be adjusted as follows: -0-

Submitted by Danielle Shea 8/17/16 Construction Manager Date 8/19/16

Approval Recommended District Engineer Date 8/26/2016

Approved: Board of Directors by Board Date

We, the undersigned contractor, have given careful consideration to the change proposed, and hereby agree that, if this proposal is approved, we will provide all equipment, furnish all materials, except as may otherwise be noted above, and perform all services necessary for the work above specified, and will accept as full payment therefore the prices shown above.

Accepted: Date 8/18/16 Contractor: ANDERSON PACIFIC ENGINEERING CONSTRUCTION, INC.

By Nora Immoor Title Proj Mgr.

If the contractor does not sign acceptance of this order, his attention is directed to the requirements of the specifications as to proceeding with the ordered work and filing a written protest within the time therein specified.

DISTRIBUTION: SECRETARY OF THE BOARD CONTRACTOR FISCAL OFFICER AUDITOR-CONTROLLER RESIDENT ENGINEER PROJECT FILE

Santa Cruz County Sanitation District

701 OCEAN STREET, SUITE 410, SANTA CRUZ, CA 95060-4073
(831) 454-2160 FAX (831) 454-2089 TDD: (831) 454-2123

JOHN J. PRESLEIGH, DISTRICT ENGINEER

AGENDA DATE: SEPTEMBER 1, 2016

BOARD OF DIRECTORS
SANTA CRUZ COUNTY SANITATION DISTRICT
701 Ocean Street, Room 410
Santa Cruz, California 95060

SUBJECT: 14th AND 16TH AVENUE PUMP STATION ABANDONMENT PROJECT
CONTRACT NO. 16D3844, JOB NO. P58366
NOTICE OF COMPLETION

The subject project was completed on July 22, 2016. The contractor was Anderson Pacific Engineering Construction, Inc., of Santa Clara, California. The project consisted of construction of sanitary sewer pump stations, sanitary sewer mains using trenchless and open trench methods, sanitary sewer force mains using open trench methods, construction of new manholes, reconstructing existing manholes, reconnecting existing sewer laterals and abandoning existing facilities.

The original bid price was $2,551,910.00, and total construction cost is $2,626,115.78. The final project costs are attached for your information.

It is therefore recommended that the Board of Directors take the following actions:

1. Accept the improvements and approve the final cost of $2,626,115.78.
2. Authorize the District Secretary to file the Notice of Completion, a copy of which is attached.
3. Direct the County Recorder to return the original Notice of Completion to the District Secretary.

Yours truly,

JOHN J. PRESLEIGH
District Engineer

CD:dls/b1829

6-1

COUNTY OF SANTA CRUZ
DEPARTMENT OF PUBLIC WORKS
STATE OF CALIFORNIA

PROGRESS PAYMENT SCHEDULE

CONTRACT:
14TH AND 16TH AVENUE PUMP STATION ABANDONMENT PROJECT

CONTRACTOR:
ANDERSON PACIFIC ENGINEERING CONSTRUCTION, INC.
1390 Norman Avenue
Santa Clara, CA 95054

PROGRESS PAYMENT NO. 14 FINAL
PERIOD: 7/23/16 **THROUGH** 9/1/16
PUBLIC WORKS JOB NO. 58366
CONTRACT NO. CW53844
CONTRACT AMOUNT $ 2,626,345.63

NO.	ITEM DESCRIPTION	PROPOSAL QUANTITY	CONTRACT UNIT PRICE	THIS PERIOD QUANTITY	THIS PERIOD AMOUNT	TOTAL TO DATE QUANTITY	TOTAL TO DATE AMOUNT
1	Mobilization & Demobilization (NTE 5% of total bid)	1	$125,000.00			1.00	$125,000.00
2	Trench Shoring	1	$62,500.00			1.00	$62,500.00
3	Traffic Control	1	$38,800.00			1.00	$38,800.00
4	Bypass Pumping	1	$74,000.00			1.00	$74,000.00
5	8-inch Sewer (Open Trench) DEC CCO 1	550	$612.00			525	$321,300.00
6	8-inch Sewer (PTGAB) DEC CCO 4	580	$672.00			567	$381,024.00
7	6-inch Force Main (Open Trench) DEC CCO 1, CCO 4	760	$165.00			733	$120,945.00
8	Receiving Shaft	3	$50,000.00			3.00	$150,000.00
9	Jacking Shaft	3	$62,000.00			3.00	$186,000.00
10	Submersible Pump Station	1	$498,500.00			1.000	$498,500.00
11	48-inch Manhole (Depth no more than 10 feet)	1	$12,000.00			1.00	$12,000.00
12	48-inch Manhole (Depth no more than 20 feet) DEC CCO 1	5	$14,000.00			3.00	$42,000.00
13	48-inch Manhole (Depth no more than 30 feet)	2	$37,000.00			2.00	$74,000.00
14	Drop Connection	4	$2,750.00			4.00	$11,000.00
15	Modify Sewer Manhole	1	$5,000.00			1.00	$5,000.00
16	Manhole Protective Lining	1	$22,000.00			1.00	$22,000.00
17	Sewer Lateral DEC CCO 3, CCO 4	150	$180.00			32	$5,760.00
18	Demolish/Abandon Sewer Facilities	1	$100,000.00			1.00	$100,000.00
19	Finish Roadway	1	$57,350.00			1.00	$57,350.00
20	Water Service, Backflow Assembly, and Hose Bibb	1	$10,000.00			1.00	$10,000.00
21	Electrical and Instrumentation	1	$115,000.00			1.00	$115,000.00
22	Replace Striping	1	$12,000.00			1.00	$12,000.00
23	Extra Work	1	$50,000.00			LS	$49,770.15
24	CCO 1 - DEC Bid Items 5,7,12; Relocate Generator	LS	$53,534.38			LS	$53,534.38
25	CCO 2 - Grinder PS 50% Deposit	LS	$8,602.53			LS	$8,602.53

THE CONTRACTOR BELOW CERTIFIES THAT ALL WORK FOR WHICH PAYMENT IS TO BE MADE ON THIS CONTRACT HAS BEEN DONE IN ACCORDANCE WITH THE CONTRACT PLANS, SPECIFICATIONS AND AGREEMENTS.

CONTRACTOR _____ DATE _____

CONSTRUCTION MANAGER _____ DATE _____

DIRECTOR OF PUBLIC WORKS _____ DATE _____

SUMMARY

TOTAL AMOUNT TO DATE	$2,626,115.78
LESS RETENTION	
NET AMOUNT	$2,626,115.78
LESS AMOUNT PREVIOUSLY PAID	$2,494,809.99
TOTAL AMOUNT PAYABLE	$131,305.79

Co

6-2

COUNTY OF SANTA CRUZ
DEPARTMENT OF PUBLIC WORKS
STATE OF CALIFORNIA

PROGRESS PAYMENT SCHEDULE

CONTRACT:
14TH AND 16TH AVENUE PUMP STATION ABANDONMENT PROJECT

CONTRACTOR:
ANDERSON PACIFIC ENGINEERING CONSTRUCTION, INC.
1390 Norman Avenue
Santa Clara, CA 95054

PROGRESS PAYMENT NO. 14 FINAL
PERIOD: 7/23/16 **THROUGH** 9/1/16
PUBLIC WORKS JOB NO. 58366
CONTRACT NO. CW53844
CONTRACT AMOUNT $ 2,626,345.63

NO.	ITEM DESCRIPTION	PROPOSAL QUANTITY	CONTRACT UNIT PRICE	THIS PERIOD QUANTITY	THIS PERIOD AMOUNT	TOTAL TO DATE QUANTITY	TOTAL TO DATE AMOUNT
26	CCO 3 - Grinder PS Remaining 50% & Add Concrete Restore	LS	$16,947.43			LS	$16,947.43
27	CCO 4 - DEC Bid Items 6,7,17, Grinder PS Install and Misc EW	LS	$73,082.29			LS	$73,082.29
28							
29							
30							
31							
32							
33							
34							
35							
36							
37							
38							
39							
40							
41							
42							
43							
44							
45							
46							
47							
48							
49							
50							
51							
52							
53							
54							
55							
56							
57							
58							
59							
60							
61							
62							
63							
64							
65					THIS PERIOD		TOTAL TO DATE
	TOTAL						$2,626,115.78

6-3

RECORDED AT THE REQUEST OF:

Santa Cruz County San. Dist.

WHEN RECORDED MAIL TO:

County Public Works, Room 410

Job No. P58366

COMPLIMENTARY RECORDING

PURSUANT TO GOVERNMENT

CODE 27383

(Space above this line for Recorder's use only)

NOTICE OF COMPLETION

NOTICE IS HEREBY GIVEN that the Santa Cruz County Sanitation District, owner of the property hereinafter described, whose address is 701 Ocean Street, Santa Cruz, California, has caused a work of improvements more particularly described as follows:

14TH AND 16TH AVENUE PUMP STATION ABANDONMENT PROJECT
CONTRACT NO. 16D3844, DPW JOB NO. P58366

to be constructed on property more particularly described as follows: 14TH and 16th Avenues, Santa Cruz, California.

The work of improvement was completed by Anderson Pacific Engineering Construction, Inc., whose address is 1390 Norman Avenue, Santa Clara, California 95054.

The work of improvement was actually completed on the 22nd day of July 2016, and accepted by the Board of Directors of said Santa Cruz County Sanitation District on the 1st day of September, 2016 .

DATED: _____

_____
JOHN J. PRESLEIGH, District Engineer
Santa Cruz County Sanitation District

The undersigned states: That he is the District Engineer for the Santa Cruz County Sanitation District, owner of the property referred to in this Notice of Completion; that the Board of Directors of said District on the 1st day of September, 2016, accepted said work of improvement and directed the filing of the Notice of Completion; that he has read the Notice of Completion and knows the contents thereof; and that the facts stated therein are true.

I declare under penalty of perjury that the foregoing is true and correct.

Executed by me this _____ day of _____, 20_____, at Santa Cruz, California.

_____
JOHN J. PRESLEIGH, District Engineer
Santa Cruz County Sanitation District

connoc2/B1830
copy: Construction
Fiscal
Auditor-Controller
Contractor

6-4

Santa Cruz County Sanitation District

701 OCEAN STREET, SUITE 410, SANTA CRUZ, CA 95060-4073
(831) 454-2160 FAX (831) 454-2089 TDD: (831) 454-2123

JOHN J. PRESLEIGH, DISTRICT ENGINEER

AGENDA DATE: SEPTEMBER 1, 2016

BOARD OF DIRECTORS
SANTA CRUZ COUNTY SANITATION DISTRICT
701 Ocean Street, Room 410
Santa Cruz, California 95060

SUBJECT: REQUEST FOR STATEMENT OF QUALIFICATIONS FOR LOAN AND GRANT CONSULTING SERVICES

Members of the Board:

As part of the District's ongoing management and improvements of its facilities, staff is recommending the solicitation of loan and grant consulting services. As your Board will recall, the 2016/17 – 2020/21 Capital Improvement Program for the District identifies numerous projects which will require loans or grants as a funding source. Application for and management of these loans and grants will be complex and will require extensive document preparation as well as coordination with funding agencies. Once funding is secured, considerable reporting as well as invoice and payment reviews will be required.

In accordance with contracting guidelines, the solicitation process is being initiated to ensure that the most qualified consultant is being considered. The proposed services that are being sought over the next four year period will include preparation of loan and grant application documents, preparation of monitoring plans, and submittal of reports on behalf of the District.

The selection process is initiated by first requesting Statement of Qualifications (SOQ) from a list of available consultants. A copy of the SOQ request letter is attached for your reference. The six most qualified consultants are selected and after further evaluation and client reference checks, the top three consultants are selected and asked to respond in writing to a Request for Proposal (RFP). A panel of engineering professionals will evaluate the written proposals and participate in an oral interview with the three finalists. The District will negotiate a one year contract with the selected firm that can be renewed for a total of up to four years. At completion of the selection process, the contract will be brought to your Board for final review and approval.

It is therefore recommended that your Board take the following actions:

1. Approve the attached Request for Statement of Qualifications for loan and grant consulting services.

2. Direct District staff to proceed with the consultant selection process for loan and grant consulting services and return to your Board at a future date for approval of the consultant contract.

Yours truly,

JOHN J. PRESLEIGH
District Engineer

KE:tlp/b1827

Attachment

Santa Cruz County Sanitation District

701 OCEAN STREET, SUITE 410, SANTA CRUZ, CA 95060-4073
(831) 454-2160 FAX (831) 454-2089 TDD/TTY- CALL 711

JOHN J. PRESLEIGH, DISTRICT ENGINEER

SUBJECT: REQUEST FOR STATEMENT OF QUALIFICATIONS FOR CONSULTING SERVICES FOR PREPARATION OF LOAN AND GRANT DOCUMENTS FOR VARIOUS SANITATION CAPITAL IMPROVEMENT PROJECTS

Dear Consultant:

The Santa Cruz County Sanitation District (District) is requesting Statements of Qualifications (SOQ) from consulting firms to aid the District in applying for loans and grants for various sanitation related capital improvement projects. The duration of the contract will be for a period of four years. Based on qualifications and references your firm may be invited to participate in the selection process which includes submittal of a written proposal for consulting services and an oral presentation with a selected panel.

The following is a list of typical tasks expected to be performed by the consultant:

1. Preparation of all application documents for State Revolving Fund (SRF) loans, grants or other type of loans available to fund the District's capital improvement projects. This includes drafting the scope of project, technical, environmental and financial packages.

2. Preparation of Project Assessment and Evaluation plans (PAEP's), Quality Assurance Project plans (QAPP's) and Monitoring plans.

3. Leading the communication between the funding agency and the District.

4. Preparation of Board letters, resolutions and presentations to the District's Board of Directors.

5. Coordination and communication with the District's Operations and Engineering staff to gather information to prepare reports to the funding agencies.

6. Submittal of reports on behalf of the District.

7. Advising the District on hiring other consultants to build projects and help prepare bids in order to comply with funding agencies' legal requirements such as labor standards.

In order to be selected to participate in the selection process, please provide a summary of your experience performing the activities listed above. In addition, please provide examples of the following which your company has worked on:

- SRF Loan application documents
- QAPP
- PAEP
- Monitoring Plan

The top three consultants will then be invited to submit a formal, written proposal and make an oral presentation. The District will negotiate an agreement for consulting services with the highest ranked consultant for final consideration and approval by the District Board of Directors.

Interested consultants must submit a SOQ and current client references for the types of projects listed above to:

Santa Cruz County Sanitation District
Attention: Kent Edler
701 Ocean Street, Room 410
Santa Cruz, California 95060

All applicants will be notified of the results of the evaluation, and the top three consultants will be invited to submit a formal (written) proposal and make an oral presentation to a District selection panel.

The District will negotiate a contract with the top-ranked consultant for final recommendation to the Board of Directors.

The SOQ must be received no later than 5:00 p.m., Tuesday, October 11, 2016.

If you have any questions regarding the requirements for SOQs, please contact Kent Edler at (831) 454-2791.

Yours truly,

JOHN J. PRESLEIGH
District Engineer

AMR:dls/440

7-4

CITY OF SANTA CRUZ

PUBLIC WORKS DEPARTMENT
809 Center Street, Room 201, Santa Cruz, CA 95060 • 831 420-5160 • Fax: 831 420-5161

COPY

RECEIVED
JUL 28 2016
Santa Cruz County Sanitation District

July 26, 2016

ROUTED TO:

✓Dist. Eng.	Asst. D.E.	✓DCW
✓Oper. Mgr.	✓San. Eng.	
Env.Pro.Co.	Construction	
Fiscal	★Next Agenda	★rec'd orig

Mr. John J. Presleigh, Director
Department of Public Works
County of Santa Cruz
701 Ocean Street, Room 410
Santa Cruz, CA 95060

Re: Murray Street Bridge Seismic Retrofit (Federal Project Number STPLX-5025(048)) ("Project") Response to Letter of May 17, 2016

Dear Mr. Presleigh:

The City of Santa Cruz ("City") is in receipt of your letter dated May 17, 2016, in which the Santa Cruz County Sanitation District ("District") takes the position that (a) the District has superior rights to the Murray Street Bridge, (b) its East Cliff Transmission Main ("ECTM") should be permanently relocated onto the Murray Street Bridge, and (c) the costs of such relocation should be borne by the above-referenced Murray Street Bridge Seismic Retrofit Project ("Project"). The City understands the District's preference to incorporate this section of the District's Force Main into the Project. We have been working with the District for approximately five (5) years in an effort to accommodate the District's needs and wishes with respect to its facilities. We appreciate the District's desire to work cooperatively and likewise wish to resolve this matter amicably. That being said, we respectfully disagree with the District's position that (a) the ECTM must be relocated as proposed by the District and (b) that the full costs of relocating such facilities should be borne by the Project.

In your letter, you indicate that the costs to relocate the District's facility should be borne by the Project in accordance with the Code of Federal Regulations Section 645.109(a) and Caltrans Right of Way Manual, Section 1304. We assume you are referring to 23 CFR Section 645.107, which sets forth the eligibility criteria for federal reimbursement of relocation costs and Section 13.04.00.00 of the Caltrans Right of Way Manual, which describes the State process for determining liability for relocation costs.

According to 23 CFR 645.107 (Eligibility), federal funds may participate at the applicable pro rata share, in an amount actually paid by the applicable Transportation Department ("TD") for the costs of utility relocations. 23 CFR 645.107(a). Federal funds may also participate for relocations necessitated by the actual construction of highway project made under one or more of the following conditions when:

(1) The State transportation department ("STD") certifies that the utility has the right of occupancy in its existing location because it holds the fee, an easement, or other real property interest, the damaging or taking of which is compensable in eminent domain,
(2) The utility occupies privately or publicly owned land, including public road or street right-of-way, and the STD certifies that the payment by the TD is made pursuant to a law authorizing such payment in conformance with the provisions of 23 U.S.C. 123, and/or
(3) The utility occupies publicly owned land, including public road and street right-of-way, and is owned by a public agency or political subdivision of the State, and is not required by law or agreement to move at its own expense, and the STD certifies that the TD has the legal authority or obligation to make such payments.

23 CFR 645.107(a). Federal funds may not participate in the cost of relocations of utility facilities made solely for the benefit or convenience of a utility. 23 CFR 645.107(h). In sum, the cost of relocating utility facilities is eligible for federal participation only when: (a) the relocation is made necessary by the proposed construction and (b) the local agency is legally liable to pay for a portion of the relocation.

The City is Not Legally Liable for All of the Requested Relocation Costs

Applying the foregoing requirements, the District's requested relocation costs do not appear to be eligible for 100% reimbursement. First, as previously discussed, the subject relocation does not appear necessary. Reimbursement is only allowed for relocations "made necessary by the proposed construction." Relocations for the benefit or convenience of the utility are not compensable. Here, there appears to be less costly and invasive alternatives to the relocation proposed by the District. Notably, the District's requested relocation and associated reimbursement of costs will in all likelihood increase the Project by 30-40%, resulting in a significant change in Project scope. To justify such request, the District will need to develop and establish a very strong case to present to the State.

More importantly, the City is not liable to pay for all of the subject relocation costs. As explained in Sections 13.040.01.00 through 13.04.01.02 of the Caltrans Right of Way Manual, liability determinations are largely based on occupancy rights. Prior and/or superior rights in the area of the impacted facility form the basis for determining responsibility for payment of relocation costs. The burden of establishing any prior or superior rights rests with the facility owner (here, the District). When dealing with public roadways, like the one herein at issue, the facility owner (District) is generally obligated to remove and relocate its facilities at its sole cost and expense, unless such owner can establish occupancy rights prior and superior to that of the State/City. Each prior right claim the facility owner (District) submits must be fully documented and supported. (*See* Caltrans Right of Way Manual §13.04.01.00). Since the facility owner (District) has the burden of establishing any alleged prior and superior rights, such owner is responsible for preparing, fully documenting and submitting its claim for its declared superior right of occupancy. As discussed below, the District has not fulfilled this burden. At most, based on the information supplied to date, the District may have a superior right solely with respect to the small portion of the facility located within the boundaries of the easement granted to the District by the Santa Cruz Port District pursuant to the Easement Deed dated January 15, 1976. However, the majority of the Project and the subject facility appears to be located outside of such easement, thus, any

reimbursement would necessarily be reduced in accordance with the procedure set forth in Chapter 13.04 of Caltrans Right of Way Manual.

The primary inquiry is whether the local agency is legally liable for any portion or all of the relocation costs. In determining liability, the factors in Caltrans Right of Way Manual Table 13.04-1 entitled "Liability Determination Factors" (duplicated here for ease of reference) must be applied:

Factor	Discussion
What is the legal basis, if any, under which the utility facility is occupying the property?	Property rights are the primary determinant of the superior right of occupancy and will be based on one of the following: 1. Fee Ownership 2. Easement (recorded or unrecorded) 3. Implied/Secondary Easement 4. Joint Use and/or Consent To Common Use Agreements 5. Prescriptive Right 6. Lease 7. License 8. Franchise 9. Encroachment Permit 10. Trespass Normally, Items 1 through 5 establish prior rights, and the State is probably liable for relocation costs, unless the documents involved contain clauses that reserved to the original grantor the right to order one or more relocations at the grantee's expense. Occupancy under Items 6 through 10 usually requires that relocations be at the Owner's expense on conventional highways. Item 8 is addressed in S&H Code Section 680 for conventional highways. Item 9 is addressed in S&H Code Section 673. Item 7 is generally like a permit and can be canceled by the fee owner of the property; therefore, the State must be the fee owner of the property to exercise any contractual rights that were originally reserved by the grantors. Item 10 is generally treated as a highway encroachment permit.
Is there a Freeway Master Contract between the Owner and State?	The State has entered into Freeway Master Contracts with several Owners. When the terms of a Freeway Master Contract address any specific S&H Code section or right, the terms of the Contract supersede the requirements of the applicable statute.
When was the route adopted by formal action of the CTC as a State Highway?	This date establishes the order of priority for the State and Owners for superior rights.
When was the adopted route declared by formal action of the CTC to be a freeway or expressway?	After the date of formal action, freeway statutes and Freeway Master Contracts apply.

Under this analysis (and applicable California statutory and common law), the facility owner is generally obligated to remove, relocate, etc. its facilities at its sole cost and expense, unless such facilities are in place pursuant to rights prior and superior to those of the State/local agency. This is in harmony with the philosophy that people as a whole have a paramount right to use the public streets wherever located and such right is superior to any other right of a portion of the general public to any use of the street inconsistent therewith. *See City of Anaheim v. Metropolitan Water Dist. Of Southern California* (1978) 82 Cal. App. 3d 763 (water district, which maintained water lines in a public street by virtue of pre-existing easement, was nonetheless required to pay cost of relocating its water lines when city engaged in a street widening project which necessitated relocation); *State v. Marin Municipal Water Dist.* (1941) 17 Cal. 2d 699, 703-04 (water district required to bear cost of relocating its lines under an existing street over which state highway was being constructed).

That being said, if the owner (District) can establish that the facility is located within a valid easement, the State/local agency may be liable for some of the relocation costs. If the owner of the subject facility claims a superior right pursuant to a prior easement, such owner must establish the location of the easement, that the facility is located within such easement, the validity of the easement, and the priority of its rights. (See Caltrans Right of Way Manual §13.04.04.02). Here, the District, in support of its position, has submitted a copy of an easement; however, the bulk of the subject facility is not located within such easement. Moreover, the District has yet to establish the priority of its rights under such easement.

The District Is Not Entitled to 100% of the Requested Relocation Costs; Any Eligible Relocation Costs Must Be Prorated

Even if the facility owner (District) establishes some form of superior right, "only the impacted portion of the existing utility facility that lies within the defined project limits is counted or measured, as applicable for use in the proration formula." (See Caltrans Right of Way Manual §13.04.01.02). In addition, the relocation costs must not include any betterment or other non-reimbursable cost items. For example, federal regulations require betterment and salvage credits and state law requires an accrued depreciation credit. (*See* 23 CFR 645.117(h) and Caltrans Right of Way Manual §13.04.05.06). Moreover, where the facility area of occupancy consists of more than one type of occupancy right (which is the case here), the facility owner is not entitled to reimbursement of 100% of the relocation costs. (See Caltrans Right of Way Manual §13.04.01.02). Instead, a proration between the facility owner and State/City of the total cost must be calculated using one of the following three methods:

Method	Usage	Explanation
Pole Count	Pole count is the normal method used for aerial facilities.	The calculation is based exclusively on the number of impacted poles located within the project limits where the Owner has the superior right, divided by the total number of impacted poles within the project limits. This calculation produces the State's share of the total relocation cost. Equal weight is normally given to each impacted pole within the project limits regardless ofancillary equipment or

		attachments such as guys, transformers, and switches. The impacted poles must be otherwise similar, as wood pole relocation costs are greatly different than special designed steel poles or other supporting structures. If impacted poles are of a mixed type, separate costing may be necessary for the dissimilar poles. See "Dollar Weighted" method below.
Facility Length	Measurement of the length of the impacted facilities is normally used for underground facilities, such as gas, sewer, and water, or for cables either directly buried or within conduits and for facilities on the surface, such as ditches or conduits.	The calculation to prorate liability is similar to the pole count method above and is based on the Owner's superior right length of the impacted facility lying within the project limits divided by the total impacted length within the project limits. The measured lengths must be of the same or similar size and type of facility, irrespective of ancillary equipment or features such as valves, manholes, switches, and transformers.
Dollar Weighted	This method is used where mixed facilities are to be prorated	This approach requires considerably more effort and documentation, as it is necessary to establish and support an installed replacement cost new for the existing facilities. The simple cost of the materials is not sufficient to establish this proration. The calculation is based on the installed replacement cost new of the existing facilities located within the project limits where the Owner has the superior right, divided by the total of the installed replacement cost new for all of the impacted existing facilities within the project limits. This calculation produces the State's share of the total relocation cost.

The method applicable to our situation is the facility length method. Additional information is needed from the District to calculate the potential eligible relocation costs (taking into consideration required credits) and the appropriate proration, applying that method.

In sum, the City is not legally liable for 100% of the costs to relocate the District's ETCM. The information the District has provided to date is inconclusive on the issues of prior/superior occupancy rights, as well as eligible relocation costs. Please provide supplemental information supporting the District's claimed prior/superior right and prorated, eligible relocation costs, applying the above analyses, as soon as possible, and, in any event, by August 5, 2016. If the City does not receive additional documentation from the District by **Friday, August 5, 2016,** it will prepare its submission to the State based on the currently available information, indicating that "liability is undetermined."

Like the District, the City is interested in working cooperatively and collaboratively to resolve these issues. As discussed with you at our April 22, 2016 meeting, the City expects the District to be responsible for all costs deemed ineligible by the State for the relocation of the District's facility. You have previously expressed an interest in preparing and developing, in conjunction with the City, a mutually agreeable Memorandum of Understanding formalizing this understand and addressing the foregoing issues. As of this date, we have not received any drafts or templates for such MOU. We respectfully request that the District give this MOU priority in order to move this Project forward. Please provide us with a draft MOU for review and consideration by **EOB Friday, August 5, 2016**. If you are unable to prepare such MOU by that date, please let me know at your earliest convenience.

By this communication, the City does not waive any of its available rights or remedies. This correspondence and all prior or subsequent communications are made with the express reservation of all rights and defenses which the City has or may have.

Your continued attention to and cooperation in this matter are appreciated. If you have any questions about this letter or the issues discussed herein, please do not hesitate to contact me or my staff.

Sincerely,

Mark R. Dettle
Director of Public Works
City of Santa Cruz

CC: CITY: Assistant Director/City Engineer – CS; Senior Civil Engineer – JS, City Attorney - HJL
COUNTY: Civil Engineer – JW; Operations Manager/Senior Civil Engineer – JS

Santa Cruz County Sanitation District

701 OCEAN STREET, SUITE 410, SANTA CRUZ, CA 95060-4073
(831) 454-2160 FAX (831) 454-2089 TDD/TTY- CALL 711

JOHN J. PRESLEIGH, DISTRICT ENGINEER

AUGUST 2, 2016

CITY OF SANTA CRUZ DEPARTMENT OF PUBLIC WORKS
MARK R. DETTLE, DIRECTOR
809 CENTER STREET, ROOM 201
SANTA CRUZ, CALIFORNIA 95060

SUBJECT: MURRAY STREET BRIDGE

Dear Mr. Dettle:

The Santa Cruz County Sanitation District (District) is in receipt of your City of Santa Cruz (City) July 26, 2016, letter regarding the Murray Street Bridge Seismic Retrofit project. The District does support the City's endeavor in seismically upgrading their bridge, but we also have significant concerns regarding the bridge project construction activities that could or will significantly impact the East Cliff Transmission Line (ECTM), our most significant force main that serves a large portion of the County and the City of Capitola (approximately 24,568 residential and commercial sewer connections).

Relocation of the ECTM is not for the District's "benefit or convenience"; absent the City's project, the District would have no reason to relocate the ECTM. Relocation is necessary because of the City's project. Our ECTM is nearing 40 years of service and we believe that it has many more years if no outside forces impact it. As stated previously, in our attached April 2016 consultant's report (Quincy Engineering), it was pointed out that the City's bridge project, including the construction of bridge abutments and piles, will subject the ECTM to damage and a risk of failure. If a ECTM failure was to occur in the Harbor Channel area, it is conceivable that it would take a contractor, under an emergency contract, up to a week or more to construct a temporary bypass around a potential failure of the ECTM within the Harbor. This could result in a potential spill into the Santa Cruz Harbor and the Monterey Bay of between 25 to 100 million gallons or more of raw sewage over a week period (depending on dry or wet weather conditions). As the City fully knows, we do not have a secondary backup to this ECTM that runs from our D.A. Porath Pump Station, including the section of the force main under the Harbor Channel and its body of water, to the City of Santa Cruz Sewage Treatment Facility.

Additionally, the ECTM consists of a 30-inch siphon that is located under the Harbor Channel and is a continuous tensioned pipeline that simply cannot be sectioned for purposes of relocation. The reason for this tensioned pipeline is that it is located in extremely poor soil conditions with no structural bearing strength. Any portion of the ECTM that is directly impacted by adjacent construction activities, including movement of any adjacent soil to our ECTM, is a serious concern to District. The risk of damage to our ECTM is just too

significant if the tensioning on the 30-inch siphon is disrupted. Our cost estimate to reconstruct the ECTM under the Harbor Channel is estimated at $5 million or more with directional drilling construction, or alternatively it could be relocated to the City's seismically retrofitted bridge at an approximate cost of $2 million. Again, our primary concern is to protect the integrity of the existing ECTM by not allowing any construction activities adjacent to it, or to have it reconstructed to an alternative location to insure the integrity of our overall sewer system.

The City's project is responsible for the cost of relocating the ECTM because the District has prior rights pursuant to express (recorded) and implied easements. As your letter notes, only a portion of the ECTM appears to be within the express easement recorded in 1976. However, due to the nature of the ECTM as described above, the effect of the City's interference with the District's easement rights in that area is the same as if the District's ECTM were located entirely within the express easement—in either case the entire 30-inch siphon has to be relocated. Moreover, the District's ECTM is located under the Harbor Channel by permission of the Port District, even if it is slightly outside the express easement area, it still establishes a right of implied easement over which the City has no superior right. Any action by the City to interfere with the District's use of its ECTM under the Harbor Channel would constitute a taking. Under these circumstances, as set forth in your letter, federal funds may be used for the cost of relocation necessitated by the project.

Notwithstanding the foregoing, the District acknowledges that there may be some betterments associated with the relocation of the ECTM that could benefit the District. The District is willing to work with the City in discussing funding betterments associated with the relocation of the ECTM to the City's bridge project, where we believe the betterments are applicable. We also committed $300,000 to the redesign of the City bridge project for relocation of the County's ECTM onto the bridge. We would like to join with the City in discussions at the state and federal level for supporting the City's bridge project, and for insuring that our District sewer system integrity remains fully intact.

Yours truly,

JOHN J. PRESLEIGH
District Engineer

JJP:tlp/437

Attachment

Copy to: City of Capitola, Department of Public Works
Santa Cruz County Sanitation District Board of Directors

QUINCY ENGINEERING

Murray Street Bridge Force Main Project

FINAL FEASIBILITY STUDY

APRIL 2016

Prepared for
Santa Cruz County Sanitation District

Prepared by
Quincy Engineering, Inc.

8-9

QUINCY ENGINEERING

Murray Street Bridge Force Main Project

Final Feasibility Study

REGISTERED PROFESSIONAL ENGINEER
No. 49691
Exp. 9-30-16
CIVIL
STATE OF CALIFORNIA
4-14-16

REGISTERED PROFESSIONAL ENGINEER
DAVINA R. GONZALEZ
No. 74886
Exp. 12/31/17
CIVIL
STATE OF CALIFORNIA
4/19/16

Prepared for:
Santa Cruz County Sanitation District
701 Ocean St, Suite 410
Santa Cruz, CA 95060

April 2016

8-10

Santa Cruz County Sanitation District
Murray Street Bridge Force Main Project
Final Feasibility Study

TABLE OF CONTENTS

1. INTRODUCTION 3

1.1 Background 3

2. PURPOSE OF THE FEASIBILITY STUDY 5

3. ALTERNATIVES EVALUATION FOR THE NEW PIPELINE 6

3.1 Pipe Size 6

3.2 Pipe Materials 6

3.3 Methods of Pipeline Support 8

3.4 Design Considerations 11

3.5 Non-Economic Considerations for the New Pipeline 14

3.6 Impacts on Bridge Design and Schedule for the New Pipeline 18

3.7 Comparison of Alternatives 18

4. PRELIMINARY COST COMPARISONS FOR THE NEW PIPELINE 19

5. ALTERNATIVES EVALUATION FOR THE EXISTING PIPELINE 20

5.1 Alternatives for the Existing Pipeline 20

5.2 Comparison of Alternatives 21

5.3 Cost 21

6. CONCLUSIONS AND RECOMMENDATIONS 21

FIGURES

Figure 1. Comparing 24-inch vs. 36-inch Pipe 9

Figure 2. Steel Pipe Supported on Bent Caps 10

Figure 3. Steel Truss Supported on Bent Caps 11

Figure 4. Temporary and Permanent Force Main General Alignments 12

Figure 5. Aesthetic Rendering of Pipe on Bridge 16

Figure 6. Railroad Easement Alignment 17

Figure 7. Steel Pipe Section (Alternative 1) 18

Figure 8. Encased HDPE Section (Alternative 2) 19

APPENDIX

Figure A1. East Cliff Transmission Main As-built

Table A1. Estimate of Construction Costs for Alternative 1

Table A2. Estimate of Construction Costs for Alternative 2

1. INTRODUCTION

The City of Santa Cruz (City) is currently in the design phase of the Murray St. Bridge Widening and Seismic Retrofit Project in the Santa Cruz Harbor (Murray St. Bridge Project). The Santa Cruz County Sanitation District (District) owns and operates the 36-inch East Cliff Transmission Main that conveys wastewater for approximately 5.7 miles from the East Cliff Pump Station to the City's Wastewater Treatment Facility. The route of the transmission main converges with the Project at the Harbor crossing. The County and the City have a long standing agreement whereby the District's transmission main is located in City roadway right of way and the conveyed wastewater is treated by the City's facility, for which the District pays fees to the City. The transmission main was constructed in 1974, and rather than placing the pipeline on the bridge, the design was for the pipeline to traverse under the Santa Cruz Harbor (Harbor). The pipeline is located approximately 10-feet below the bottom of the channel and is the system's only wastewater conveyance pipeline from the East Cliff Pump Station to the City's Wastewater Treatment Facility. Construction of the bridge widening requires driving piles near the existing force main which will generate vibrations that will subject this critical pipeline to damage and risk of failure. The District has retained Quincy Engineering, Inc. to evaluate the feasibility of permanently relocating the impacted portion of the force main from beneath the Harbor to the north side of Murray St. Bridge. The purpose of this feasibility study is to identify and evaluate alternatives and provide recommendations for size, material, and layout of the new pipeline on the bridge.

1.1 Background

A number of feasibility studies and technical memoranda evaluating alternatives for protecting the integrity of the force main through bridge construction have been completed to date. Alternatives for the permanent pipeline evaluated in previous feasibility studies included rehabilitating the existing pipeline via slip lining, installing a new replacement pipeline beneath the Harbor via microtunneling, attaching a new pipeline to the north side of the bridge, suspending the new pipeline from the bridge, and installing two new parallel pipes under the Harbor. Recently, a temporary bypass plan was completed to take the District's force main offline during bridge construction (HDR, 2015).

Prior studies are summarized below, without conclusion or opinion of the findings.

- In 2013, TRC, the City's design engineer for the Murray St. Bridge Project, completed a feasibility study for the City for supporting the relocated 36-inch force main on the north side of Murray St. Bridge and found that this option was feasible but not without many disadvantages such as visually impacting drivers and adding liability of an exposed pipeline.
- A January 2014 TRC memo evaluated six different alternatives including protecting in place, relocating to the north side of the railroad bridge, relocating to the south of its current alignment, relocating to the south of the project, hanging the pipeline on the

north side of the bridge, and relocating the pipeline to the north side of the bridge (a summary of the 2013 feasibility study). The memo also compared these alternatives to the District's alternatives which included relocating the pipeline just south of the existing alignment, relocating to the south of the project, and hanging the pipeline from the bridge. The TRC memo concluded that the preferred alternative was to relocate the pipeline to the north side of the bridge.

- In January 2015, HDR completed a technical memorandum for the District presenting the basis of design for the temporary bypass pipeline to facilitate bridge construction. The memo recommended inspecting and repairing any defects to the original East Cliff Transmission Main underneath the Harbor following construction.
- In October 2015, HDR submitted a memo to the District recommending a cured-in-place pipe (CIPP) liner be installed within the existing force main following the pile driving operation for the bridge expansion. To meet the existing capacity of a 36-inch pipeline, HDR proposed also installing a 24-inch pipeline within the bridge diaphragm or attached to the side of the bridge.
- In November 2015, TRC evaluated the impacts of redesigning the bridge to accommodate a permanent 24-inch pipeline on the north side of the bridge. This evaluation assumed that the temporary 24-inch bypass would still be constructed, after which the existing 30-inch force main under the Harbor would be lined, realigned, and ultimately returned to service (TRC, 2015). The addition of a new, permanent 24-inch pipeline on the north side of the bridge presented additional impacts to the bridge design, among other impacts as summarized below.

Environmental

The document mentions a concern that the additional work (pipe on bridge) may not be covered under the existing CEQA Initial Study and additional time required may exceed the time allotted under the approved CEQA document, potentially requiring a reopening of the document.

Right of Way

The CEQA Initial Study confirms that the bridge project would encroach on the railroad easement on the northwest side. The Union Pacific Railroad/UPRR, now Iowa Pacific/Santa Cruz County Regional Transit Commission (SCCRTC), maintains a bridge and track located approximately 20 to 30 feet north of the Murray Street Bridge (with the distance increasing west to east). It appears that a northwestern sliver of Murray Street is within the railroad right-of-way. Any encroachment into the right-of-way during project construction will need to be coordinated with and approved by Iowa Pacific/SCCRTC. Per the CEQA Initial Study, construction on the northern side of the bridge will require railroad flaggers for the protection of workmen and railroad traffic.

- In November 2015, TRC completed 95% design drawings for the Murray St. Bridge Project. The plans include the design for a 24-inch temporary bypass on the bridge, and the lining and realignment of the existing 30-inch force main beneath the Harbor.

In summary, the previous feasibility studies and technical memoranda evaluated many alternatives for either protecting or replacing the existing force main through bridge construction. In January 2016, the District retained Quincy Engineering, Inc. to consult the District on this project and perform this study. The purpose of this study is to evaluate the feasibility of installing a new permanent pipeline on the bridge and the potential for abandoning or reusing the existing force main beneath the Harbor as an emergency bypass.

2. PURPOSE OF THE FEASIBILITY STUDY

Although the previous studies were well researched and analyzed multiple alternatives, there are several key items that were not fully explained.

- The 1974 pipeline design (specifically the "U" shaped section of pipe forming a siphon under the Harbor) consisted of type C303 pipe, a welded steel cylinder with steel reinforcing bars wrapped under tension around the cylinder to provide strength. During construction, pipe segments are joined together to form one uniquely complete system. This type of construction does NOT lend itself to repair of short sections within the system. The pipeline, as shown in Appendix Figure A1, begins its transition to cross the Harbor in the general vicinity of the westerly abutment of the Murray St. Bridge with a 36 x30 reducer. It then slowly dips deeper to cross under the waterway with approximately 10 ft of cover at the channel bottom. The siphon rises to the east side of the Harbor where it connects by means of a second 36"x30" reducer to the 36-inch transmission main in the general vicinity of the easterly abutment of the bridge. Stationing shows this segment to be approximately 875 ft.
- The Murray St. Bridge Project requires that abutment 1 will be extended south by approximately 10 ft, with 4 piles constructed to support the abutment. This construction is in direct conflict with the transmission main, and relocation of the pipeline is absolutely required to perform the bridge work. In addition, bent 2 will be constructed in direct conflict with the pipeline, also requiring relocation of the pipeline.
- Attempts to line the pipeline with a liner is not recommended by most manufacturers and installers of the liners. The purpose of the lining is to seal the pipe against leaks, possibly due to corrosion of the pipe itself. If vibrations or physical contact to the pipeline occurs during construction of the piers that are in close vicinity to the pipeline, joints (secured with steel nuts, bolts, and harnesses) that have been buried in a moist/saline environment for over 40 years are at high risk to become disengaged. Liners are not meant to be a substitution for a broken joint under this type of installation.

- The pipeline under the Harbor actually forms a siphon, more specifically, an inverted siphon. Inverted siphons allow wastewater to pass under obstructions such as rivers. Unlike the rest of the transmission main, the siphon pipes flow under additional pressures due to physics. In addition, because the inverted siphon creates a low point in the pipeline, higher velocities in the pipeline are required to keep the solids in suspension so the pipe will not become plugged at the lowest point. A smaller internal diameter of the pipeline creates a higher velocity of the liquid through the pipe. The standard used for pipeline design is Q=VA. Q is the flow, V is velocity and A is the area of the pipe (using the internal diameter). Therefore, the smaller the area, the higher the velocity to transmit the same flow. The inverted siphon is reduced from 36-inches to 30-inches to accommodate the movement of the wastewater and keep solids in suspension.

Because of these four discrete points, the pipeline under the Harbor is at great risk to be damaged and be rendered inoperable. Therefore, the District has requested a Feasibility Study to place the transmission main on the bridge during the construction of the Project.

3. ALTERNATIVES EVALUATION FOR THE NEW PIPELINE

The following evaluation is based exclusively on the proposed alignment of the permanent force main on the north side of the Murray Street Bridge.

Alternatives considered for the new pipeline include the following:

- pipe size
- material
- methods of pipe support

3.1 Pipe Size

The East Cliff Transmission Main is a 36-inch sewer force main that connects the East Cliff Pump Station with the City of Santa Cruz Wastewater Treatment Facility. Approximately 3.5 miles upstream of the treatment facility, on the west and east sides of the Harbor, the force main reduces down to a 30-inch pipeline via a 36x30 reducing elbow to account for the change in hydraulics, the siphoning effect, and the need to increase velocities through the low point of the pipeline as it traverses under the Harbor. If the pipeline is attached to the bridge abutments and bent caps, there is no longer a need to reduce down to a 30-inch pipeline. In fact, reducing the pipeline diameter in a straight segment of this transmission main will cause a restriction and reduced capacity of the pipeline. The recommended pipe size from an operation/maintenance standpoint is a 36-inch diameter pipeline.

3.2 Pipe Materials

There are several different pipe materials that are commonly used for sewer force mains. The three pipe materials evaluated for this project are steel pipe (C200), high density polyethylene

(HDPE), and concrete bar wrapped cylinder pipe (C303). The pipe materials considered must be able to accommodate moderate pressures and withstand chemical corrosion and abrasion from sewer solids. The pressure rating of the permanent pipeline shall match the rating of the existing pipeline (C303) which is 150 psi. The pipe material chosen will also depend on whether the pipe is utilized as a carrier pipe or a casing pipe. The carrier pipe for the purposes of this evaluation denotes the main wastewater conveyance pipeline. The casing denotes an exterior pipeline acting as a secondary containment and encasement for the carrier pipeline. We will evaluate the alternative pipe materials based on their use as a carrier or a casing.

Steel Pipe

The first pipe material alternative considers use of steel pipe as the carrier pipe, with no casing. AWWA standard C200 (steel pipe) is a flexible pipe manufactured in a variety of standard sizes, with a variety of different coatings, linings, and wall thicknesses making it suitable for above-grade installation. The minimum shell thickness of C200 is 0.20 inches, which is the recommended minimum wall thickness for handling. However, other criteria such as stresses and span length will determine the wall thickness in final design. One disadvantage of C200 steel pipe is that it is prone to corrosion. The pipe manufacturer recommends LifeLast DuraShield 210 lining and coating for this type of use and above grade installation to provide internal and external protection from corrosion. DuraShield polyurethanes are very durable, hydrophobic, chemical resistant, and have excellent abrasion and impact resistance properties. Steel pipe can be installed by field welding or use of a rubber gasket bell and spigot. With either installation method, the lining and coating will need to be repaired in place at the joints.

HDPE Pipe

The second pipeline material considered is high density polyethylene (HDPE). HDPE is a flexible pipe material which allows for tight bending radii to get through curves within short distances with little need for costly fittings. Eliminating fittings can result in significant cost savings. HDPE fittings can be customized to any angle and are less costly than most materials. The butt fusion process is commonly used to make pipe end-to-end joints. The ends of the HDPE pipes are simultaneously heated and melted then pressed together and held under pressure. As the molten surfaces are pressed together, the melted ends mix and once cooled, they fuse into a permanent homogeneous joint which is as strong as or stronger than the pipe itself in both tensile and pressure properties. HDPE does not require any external joint restraint fittings as it is effectively a jointless pipe. HDPE pipe is resistant to corrosion and abrasion and thus does not require a lining or coating. Because HDPE pipe is extremely flexible, it cannot be utilized to span a bridge without structural support. If HDPE pipe is selected, it would be installed in a steel encasement, preferably C200 steel pipe. The thickness of HDPE pipe required to achieve a 150 psi pressure rating is approximately 3 inches. HDPE is manufactured in nominal pipe sizes and refers to the pipe by its outside diameter (OD). For purposes of this Study and to avoid confusion, we will refer to HDPE pipe by its inside diameter. The design of the 36-inch inside diameter (ID) HDPE pipe with a 150 psi pressure rating will require a 42-inch outside diameter

(DR 13.5). A steel pipeline large enough to encase a 36-inch ID HDPE pipeline would be 48-inch in diameter, thus increasing the overall size and weight of pipe on the bridge.

Concrete Bar-Wrapped Steel-Cylinder Pipe (C303)

AWWA standard Concrete Bar-Wrapped Steel-Cylinder (C303) pipe is the same material as the existing East Cliff Transmission Main. C303 is comprised of a welded steel cylinder that serves as a watertight membrane and works together with steel reinforcing bars wrapped under tension around the cylinder to provide strength. An internal concrete lining and external mortar coating provide corrosion protection to the steel components. The cement mortar coating, up to 1-inch thick over the steel cylinder, is placed over the steel cylinder and bars and places the steel in an alkaline environment that prohibits corrosion. If the coating deteriorates or is damaged, the alkaline environment will be compromised, leading to corrosion of the steel cylinder and bars. Because the C303 pipe coating is more prone to damage and it requires much more maintenance, it is not an ideal pipe material for an above grade installation, and was therefore not considered as an alternative material on the bridge.

3.3 Methods of Pipeline Support

It was determined that some of the bent caps are not sufficiently sized nor located at appropriate locations along the entire length of the bridge to support the pipe. Due to site constraints, the westerly abutment and Bents 2 through 5 are not extended enough to support the pipeline. For approximately 240-feet, the pipeline will need to be supported by other means. This can be accomplished by a steel truss structure. The size and design parameters of the truss structure will depend on the pipeline material alternative selected. The sewer force main installed across the bridge can be supported in several different ways depending on site conditions, size, and economics. In a February 2016 design workshop with TRC, City of Santa Cruz, the District, and Quincy Engineering, methods of pipe support for the permanent pipeline were discussed.

Hanging the Pipeline from the Bridge

Hanging the pipeline from the bridge was eliminated as an option because the size of the pipeline. A 36-inch diameter pipeline is too large to fit under the proposed bridge deck. Previous feasibility studies evaluated this method assuming a maximum pipeline diameter of 24-inches. However, a 36-inch diameter pipeline is required to achieve the full transmission capacity of the District's force main. An illustration of a 24 vs. 36-inch pipeline hanging from the bridge is shown below.

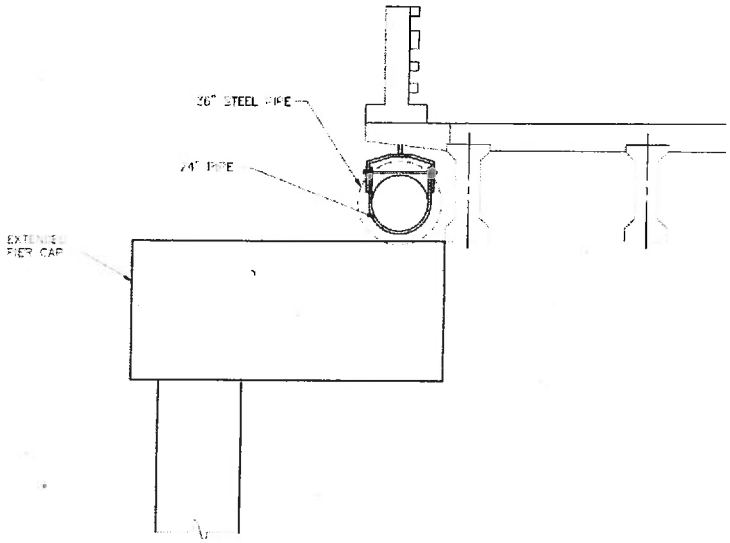

Figure 1 COMPARING 24" AND 36" PIPE

Spanning the Pipeline on Bridge Bent Caps

Installing the pipeline on the bridge bent caps is a feasible option for steel pipe as a carrier or as a casing. Figure 2 below depicts a steel carrier pipe option. Spanning the pipeline requires the bridge bent caps to be of sufficient size to support the pipeline. Additional supports will be required to account for pipe stresses, as discussed in the following section. Fortunately, these bent caps were designed to be extended as part of the bridge widening and seismic retrofit project. Coordination with TRC will be required to confirm that the bridge caps can support the pipeline and that no conflicts are created at the tie-in points on the west and east ends of the pipeline.

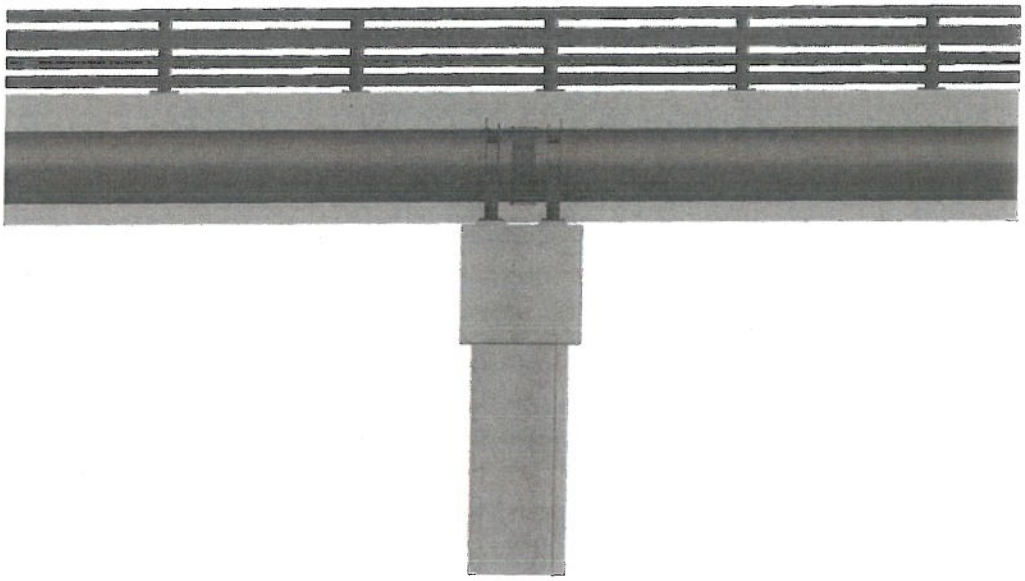

Figure 2 Steel Pipe Supported on Bent Caps

The benefit of spanning the force main on bridge bent caps is that the pipeline would now be easily accessible for maintenance. Any leak detection could now be performed visually. An above-grade pipeline that could be observed and maintained is significantly more environmentally sustainable than a pipeline underneath the Harbor.

Steel Truss Structure to Support Pipeline on Bridge Bent Caps

Using a steel truss structure to support the full length of pipeline on the bridge bent caps was discussed at the design workshop and eliminated as an option because it quickly became cost prohibitive and is not necessary. An elevation view of this option is shown in Figure 3 for purposes of comparison.

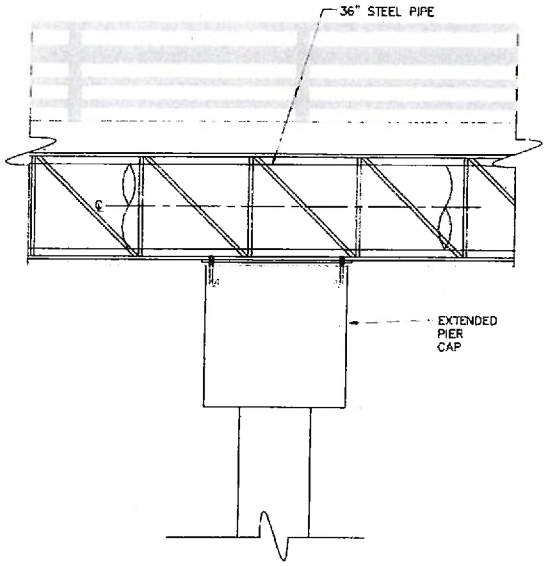

Figure 3 ELEVATION DETAIL WITH STEEL TRUSS OPTION
Scale: NTS

3.4 Design Considerations

The following is a brief overview of the design considerations involved in relocating the District's force main to an above-grade location, simply-supported on the bridge.

Pipeline Alignment

The general alignment of the temporary and permanent pipeline are discussed below and illustrated in Figure 4.

Temporary Bypass during Construction

For the purposes of this evaluation, the general alignment of the temporary bypass (bypass) will follow HDR's temporary bypass alignment as shown in the 95% Murray St. Bridge design plans. The bypass will tie into the 36-inch force main in Lake Avenue, then proceed northerly to Eaton Street, westerly and within the northern (west-bound) lane of the Murray Street Bridge, and will ultimately tie into the existing 36-inch force main in Murray Street. However, because the 24-inch temporary bypass as previously recommended reduces and restricts the capacity of the transmission main, the bypass must be 36-inch diameter to match the existing East Cliff Transmission Main.

Pipeline Alignment – Permanent Relocation

The permanent force main will follow in parallel the same general alignment as the bypass, only constructed on the bridge bent caps instead of the west-bound lane. In order to save on construction costs, it is anticipated that a portion of the bypass pipeline will be installed as the permanent pipeline at the tie-in to the 36-inch force main on the west and east sides of the Harbor. This would prevent the need for traffic control on Lake Avenue in order to complete the easterly permanent pipeline tie-in.

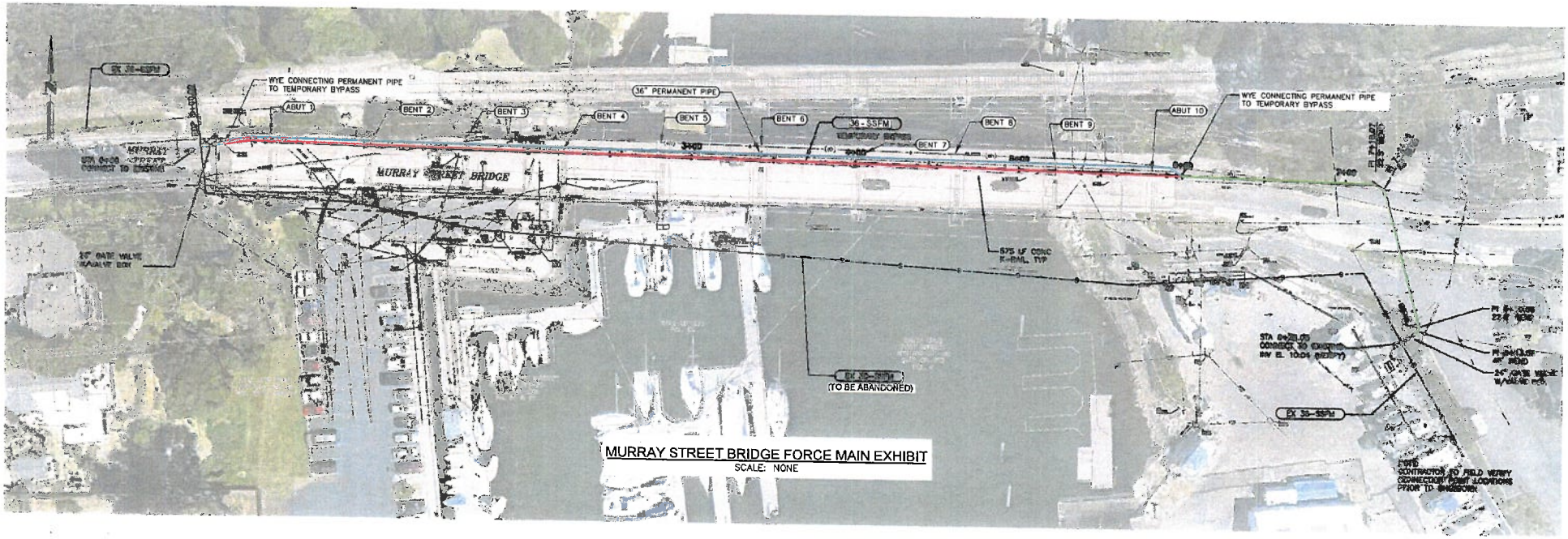

LEGEND

- TEMPORARY BYPASS
- PERMANENT PIPE
- TEMPORARY BYPASS (ALSO PERMANENT PIPE)

QUINCY ENGINEERING

FIGURE 4

SANTA CRUZ COUNTY SANITATION DISTRICT
MURRAY ST BRIDGE FORCE MAIN PROJECT

TEMPORARY AND PERMANENT FORCE MAIN GENERAL ALIGNMENT

Pipeline Design Span Lengths

According to the AWWA M11 design manual for steel pipe, the allowable span for 36-inch to 48-inch diameter steel pipe is 65 feet for ½-inch wall thickness. The bent caps are approximately 60 feet apart which allows the steel pipe to span between bent caps as a carrier or a casing pipe.

Pipe Supports

When installed on bridge bent caps or outriggers, ring girders or support rings are provided to transfer the beam reactions through rocker assemblies, roller assemblies, or bearing plates to the concrete pier supports. Details of this design will be completed in the design phase of the Project and will vary depending on the pipe material, carrier or casing size, and economics of the Project.

Appurtenances

Until the pipeline material and alignments are selected in the pre-design phase, it's difficult to anticipate the number of appurtenances required for the Project. Typical features such as valves, access ports, and pigging stations were considered in the design of this new pipeline.

Air/Vacuum Valves

Installation of air and vacuum release valves are required on pressure pipelines. Entrained air and gasses in the wastewater can collect at a high point, causing a restriction to flow in the pipe. Placing a valve at the high point allows the trapped air to escape the pipeline. Similarly, a vacuum condition occurring in the pipeline can cause the pipe to collapse. The air/vacuum valve allows air to enter the pipe, as necessary, to mitigate the pressure differential. It is assumed that one air/vacuum valve at the high point in the pipeline will be required.

Blow-off Valves

The existing system has one blow-off valve on the west end of the Harbor crossing, for purposes of draining the line as required for maintenance. This feasibility study assumes replacement of the blow-off valve, most likely near the westerly tie-in to the existing line. In addition, a blow-off valve will be required on the east side of the pipeline, as is standard for maintenance purposes.

Isolation Valves

Engineering design of pipelines that cross a bridge often includes installation of an isolation valve on each side of the bridge. The isolation valves facilitate shutting down the bridge portion of the pipeline for maintenance or emergency repairs. In the realignment of the District's force main, installing isolation valves will accommodate the construction of the temporary bypass pipeline as well as serving the future needs of the permanent pipeline. The exact number of isolation valves will be determined in the future pipeline design phases. Only two isolation valves will be assumed for this feasibility study.

Moisture Monitoring Sensors

When the carrier pipe is installed in a casing pipe, moisture sensors will be installed to indicate that there may be a leak in the pipeline. The moisture sensors will be installed at each end of the encasement, with probes inserted into the annular space between the carrier and casing pipes. Further evaluation will take place in the design phase.

Pigging Stations

At this time, it is unknown whether pigging stations will be needed. This option can be evaluated in the design phase.

Pressure Manholes/Access

Pressure manholes and access manholes can be evaluated in the design phase, but have not been evaluated in this feasibility study. A preliminary cost has been included in construction cost estimates.

3.5 Non-Economic Considerations for the New Pipeline

Other considerations will likely influence the final pipe material and alignment selection as there are a number of stakeholders involved in the project. Stakeholders include the District, the City, TRC, Port District, California Coastal Commission, Iowa Pacific, Santa Cruz County Regional Transit Commission (SCCRTC), and local residents.

Several non-technical, non-economic based considerations that may or can affect the selection of alternatives are described below.

Aesthetics

The placement of the permanent pipeline on the bridge is a change to the aesthetics of the Harbor and as such, stakeholders may propose additional requirements such as painting of the pipeline or they may outright eliminate any visible alternative based on aesthetics alone. As far as visibility, the top of the pipeline will be at the bridge deck level, and therefore will not directly affect the view shed. The current view of the Murray St. Bridge is partially obstructed from the north by the railroad bridge, and therefore the view of the new pipeline on the north side of the bridge will also be obstructed. Exterior painting for corrosion protection of the steel pipe has been added as an option to the overall project construction costs. Color choices can be a no cost alternative. However, any additional mitigation measures such as graphics or visual barriers (structures to cover a view of the pipe), are not included in this evaluation at this time. One rendering of a proposed pipeline on the bridge is provided in Figure 5.

Safety and Vandalism

Stakeholders may impose additional requirements for safety, anti-climb, and anti-vandalism. Features such as fan-shaped attachments to the top of the pipe can restrict people from walking along the top of the pipe. Adjustments to the height of the bridge railing on the north side of the bridge can be reviewed. Special coatings can be applied to the pipe to ease the removal of graffiti. These features will be addressed in the design phase. Costs for these features are not included in the pipeline construction costs for this study.

Regulatory Requirements

The project will need to comply with all local, state, and federal regulatory requirements. It is known, for example, that the pipeline encroaches onto the Iowa Pacific/SCCRTC railroad easement near the western side of the bridge because the roadway and railroad alignments converge, as depicted in Figure 6. It is assumed that any encroachment into the railroad easement has been previously addressed by the bridge project. Because the width of the pipeline, including supports and appurtenances, does not project further north than the bent caps, installing the pipeline on those bent caps on the north of the bridge will not create an additional encroachment. Installing the pipeline on the bridge could potentially be a change to the project aesthetics and utilities impacts as presented in the 2007 CEQA Initial Study for the Murray St. Bridge project. The City indicated in the February 2016 design workshop that the pipeline impacts are covered in the Initial Study, but would also be investigated further by the City's environmental consultant.

Although environmental review has not evaluated the pipe on the bridge, it has been our experience and is standard practice to provide dual containment for a pipeline on a bridge. Dual containment of potable water lines has been required on many of our projects. It is anticipated that because of the environmental harm that would result from a sewage spill into the Harbor, this pipeline will require dual containment. As such, our recommendations and costs for alternatives will include encasement of the carrier pipe.

FIGURE 5: AESTHETIC RENDERING OF PIPE ON BRIDGE

SCALE: NTS

QUINCY ENGINEERING

8-26

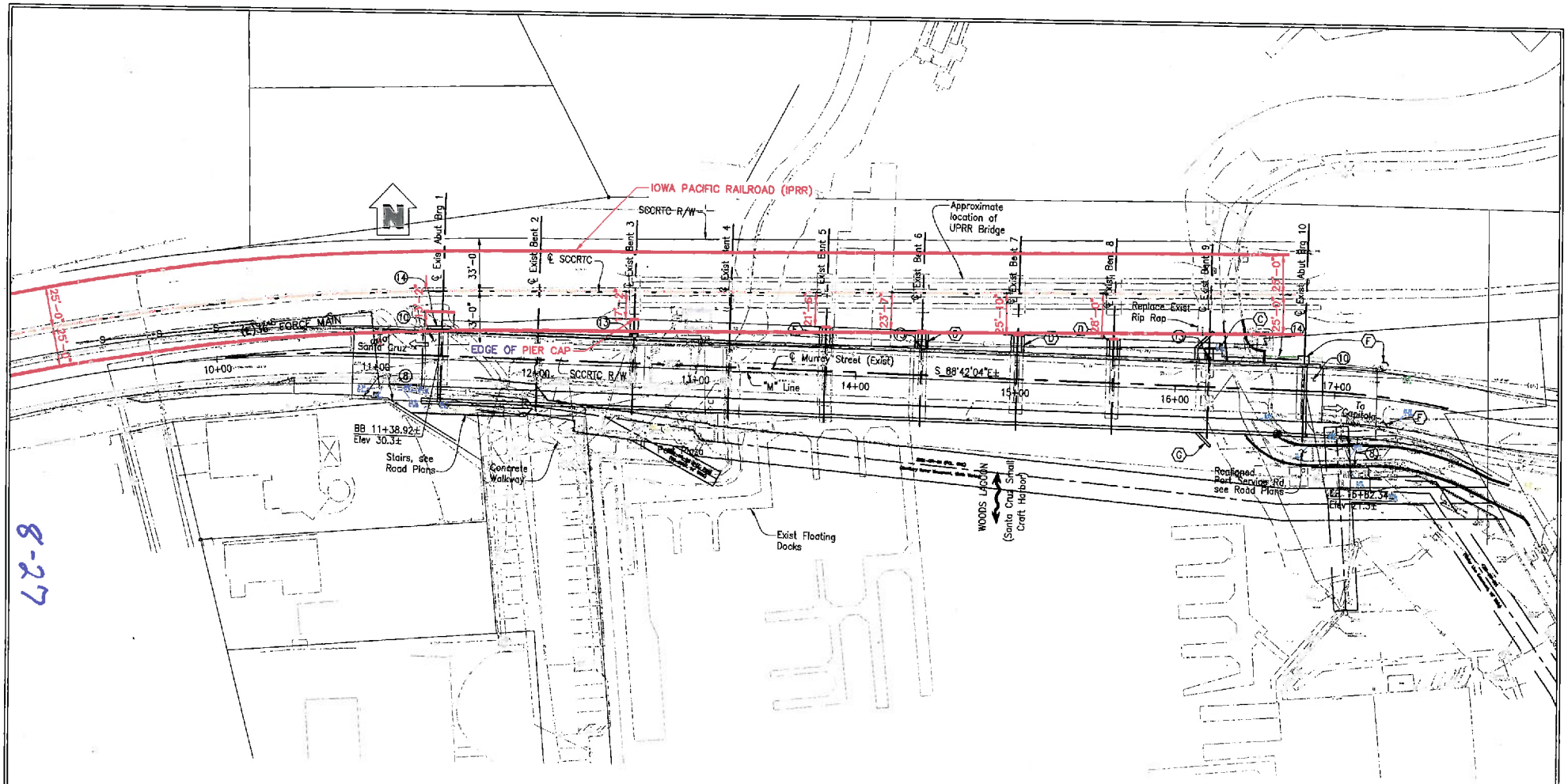

QUINCY ENGINEERING

FIGURE 6

SANTA CRUZ COUNTY SANITATION DISTRICT
MURRAY ST BRIDGE FORCE MAIN PROJECT

RAILROAD EASEMENT ALIGNMENT

3.6 Impacts on Bridge Design and Schedule for the New Pipeline

Impacts to Bridge Design

In November 2015, the 95% plans for the Murray St. Bridge widening project were produced assuming a 24-inch temporary bypass pipeline and the lining and rehabilitation of the existing sewer force main underneath the Harbor. Since then, the County has proposed a Memorandum of Understanding to work with the City on the redesign of the bridge project to accommodate the permanent relocation of the pipeline onto the bridge. At the time of this study, the Memorandum of Understanding had not been finalized and therefore costs associated with the impacts to the bridge design cannot be anticipated.

Impacts to Bridge Construction

The staging and sequencing of the bridge widening project is also impacted by the placement of a permanent pipeline on the bridge. It will require close coordination with TRC and the City to reduce the potential for schedule delays and conflicts associated with multiple contractors on the same construction site.

3.7 Comparison of Alternatives

Based on the evaluation of required pipeline capacity, appropriate pipeline materials, methods of supporting the pipeline on the bridge, two feasible alternatives were identified. The most feasible alternatives to consider for this project are as follows:

Alternative 1: C200 Steel Pipeline Supported on Bridge Bent Caps

The first alternative, illustrated in Figure 7, assumes a 36-inch C200 steel pipe spanning the bridge on the extended bent caps. A steel truss structure will be required to support the pipeline from the westerly abutment to Bent 3 and from Bent 3 to Bent 5.

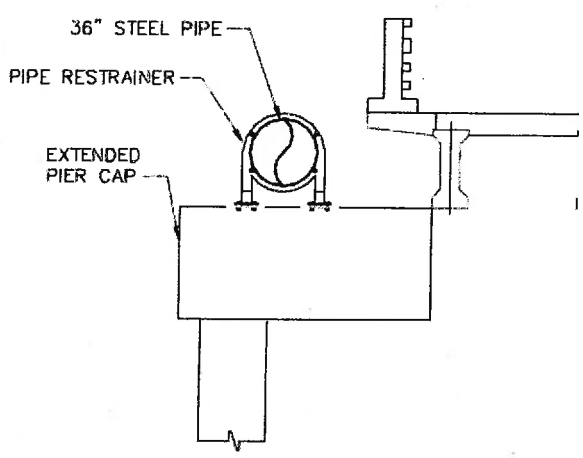

Figure 7 STEEL PIPE SECTION (ALTERNATIVE 1)
Scale: NTS

Alternative 2: HDPE Pipeline with C200 Casing Supported on Bridge Bent Caps

The second alternative, as illustrated in Figure 8 below, assumes a 36-inch ID HDPE carrier pipe with a 48-inch C200 steel casing spanning the bridge on the extended bent caps. This alternative will also require a steel truss structure to support the pipeline from the westerly abutment to Bent 3 and from Bent 3 to Bent 5.

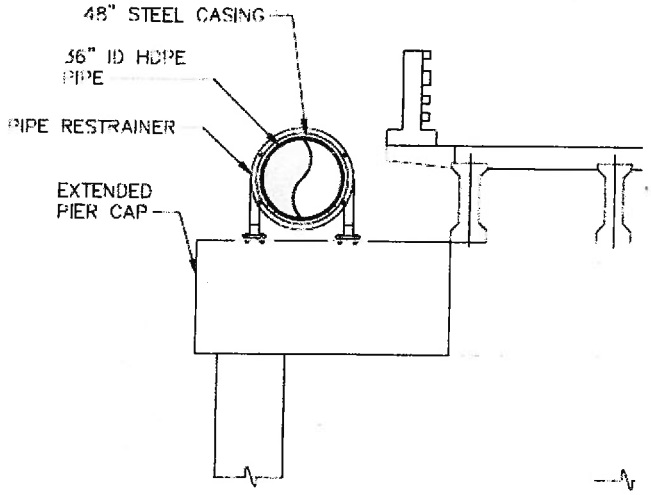

Figure 8 ENCASED HDPE SECTION (ALTERNATIVE 2)
Scale: NTS

Both alternatives assume the same general alignment.

4. PRELIMINARY COST COMPARISONS FOR THE NEW PIPELINE

An engineer's opinion of probable construction costs was developed for each of the selected feasible alternatives. Tables 1 and 2, appended to the end of this document, illustrate the anticipated line items and estimated pipeline costs at this preliminary feasibility phase. Due to the preliminary nature of the design at this time, a contingency of 20% has been added to the costs.

Alternative 1: C200 Steel Pipeline Supported on Bridge Bent Caps

Preliminary construction costs have been compiled assuming 36-inch C200 steel pipe spanning the bridge on the extended bent caps, with a steel truss structure from Abutment 1 to Bent 3 and from Bent 3 to Bent 5.

Engineer's Opinion of Probable Construction Costs: $1,630,000

Alternative 2: HDPE Pipeline with C200 Casing Supported on Bridge Bent Caps

Preliminary construction costs have been compiled assuming 36-inch (ID) HDPE carrier pipe with a 48-inch C200 steel casing pipe spanning the bridge on the extended bent caps, with a steel truss structure from Abutment 1 to Bent 3 and from Bent 3 to Bent 5. The cost of this alternative is higher than Alternative 1 due to significantly higher material and installation costs of two larger redundant pipes. A summary of costs is presented in at the end of the document. All costs are based on a "conceptual" level of design and a 20% contingency which can be reduced after more detail allows quantity and unit price estimates to be refined.

Engineer's Opinion of Probable Construction Costs: $2,110,000

5. ALTERNATIVES EVALUATION FOR THE EXISTING PIPELINE

The existing force main crossing underneath the Harbor is a 30-inch diameter C303 pipeline. The force main cannot be removed without significant impacts to Harbor water and soils. Thus, the existing force main should remain in-place. The District has requested an evaluation of alternatives for either abandoning or repairing and reusing the existing force main as an emergency bypass for the East Cliff Transmission Main system.

5.1 Alternatives for the Existing Pipeline

Abandonment

In order to abandon the line in-place, cleaning of the line, inspection, and a leak test is recommended. Each end would need to be capped where the bypass and permanent lines intersect the force main. Sand or slurry backfill would be pumped in and once filled, the pipeline would be left in-place. Inspection and a leak test is recommended to rule out any gaps in pipeline through which backfill material might escape during the abandonment procedure. In order to prevent spillage and need for further repairs, it is recommended that abandonment be completed prior to pile driving operations.

Repair and Reuse as Emergency bypass

As an alternative to abandonment, it has been suggested that the force main could be repaired and reused as an emergency bypass. This Study, as well as previous reports, has determined that the bridge construction may compromise the integrity of the full length of the pipeline under the Harbor. Some of the previous studies have suggested alternatives for reusing the pipeline such as reuse for an emergency bypass.

During the preparation of this Study, we have determined that any future use of the pipeline is impractical for the following reasons:

- The integrity of the pipeline will be impaired during construction of the bridge. Lining the pipe will not structurally support the joints. Failure at the joints poses the risk of wastewater leaking into the Harbor. Because the pipeline is buried under the Harbor channel bottom, there is no way to inspect the pre-construction nor post construction condition of the exterior steel nuts, bolts, and harnesses.

- An inspection to determine the extent of damage following pile driving operations can only be performed on the interior of the pipeline by camera, and this would not show the condition of the exterior joint fasteners and restraint.
- Using the pipeline as a casing for a carrier pipe, for an emergency bypass, is also not feasible. This alternative has limitations due to the number of bends and restrictions that would be imposed on the fittings. Due to the 10-24 degree bends throughout the line, a smaller diameter pipeline could not be pulled through and thus, this option can be eliminated. Using the pipeline as a conductor would also mean that some realignment and extension of the pipeline would need to occur, especially on the west side of the Harbor. Abandonment clears the utility corridor around abutment 1.

An evaluation of costs for options of future uses of the existing force main are based on construction costs alone. The decision to utilize the existing force main as an emergency bypass has been eliminated from further consideration due to high risks of failure.

5.2 Comparison of Alternatives

Based on the above criteria, only one feasible alternative for the existing force main has been identified. The abandonment of the existing C303 pipeline protects the Harbor from the risk of future spills.

5.3 Cost

Construction costs were evaluated for abandonment of the pipeline and are mostly attributed to labor. The cost is estimated at $100,000.

6. CONCLUSIONS AND RECOMMENDATIONS

The main benefits of permanently relocating the force main onto the bridge are:

- It is significantly more environmentally sustainable than attempting to repair the existing force main. Repairs cannot be accomplished to fully remove the risk of failure (leaks of wastewater into the Harbor).
- Installing the pipeline above the Harbor will allow monitoring and maintenance to easily occur, avoiding the risks of future spills.
- Operation and maintenance needs identified by District staff will be met by eliminating a low point in the system that is difficult to clean, if necessary.
- The East Cliff Transmission main capacity of a 36-inch force main will preserve the integrity of the system long-term.

Our recommendations assume the following:

- The City has confirmed that the project is covered under the existing CEQA Initial Study for the Murray St Bridge Project
- The City has accounted for the right of way agreements with Iowa Pacific/SCCRTC as part of the Murray St Bridge Project

- Details of pipe wall thickness, lining and coating, pipe supports, appurtenances, and exact alignment will be determined in the design phase

The following recommendations are based on the evaluation of the required pipeline capacity and practical permanent pipeline realigned due to bridge widening and seismic retrofit project construction.

A summary of our recommendations for a pipeline on the bridge are as follows:

- The pipeline diameter for both the temporary bypass pipeline and the permanent pipeline located on the bridge shall be 36-inches interior diameter.
- The pipeline materials shall be HDPE as the carrier pipe with steel encasement.
- The pipeline shall be supported on the extended bridge caps at Bents 6 through 9 via steel supports (i.e. ring girders / bearing assemblies) and on a steel truss from Abutment 1 to Bent 3 and from Bent 3 to Bent 5.
- The existing pipeline under the Harbor shall be filled and abandoned in-place.
- Construction staging and sequencing shall be coordinated with the bridge designer TRC and the temporary bypass construction shall include portions of the pipe being installed as permanent pipe.
- The sequence of construction shall be to first install the temporary bypass, then inspect, repair, fill, and abandon the existing 30-inch force main under the Harbor.

APPENDIX

FIGURE A.1

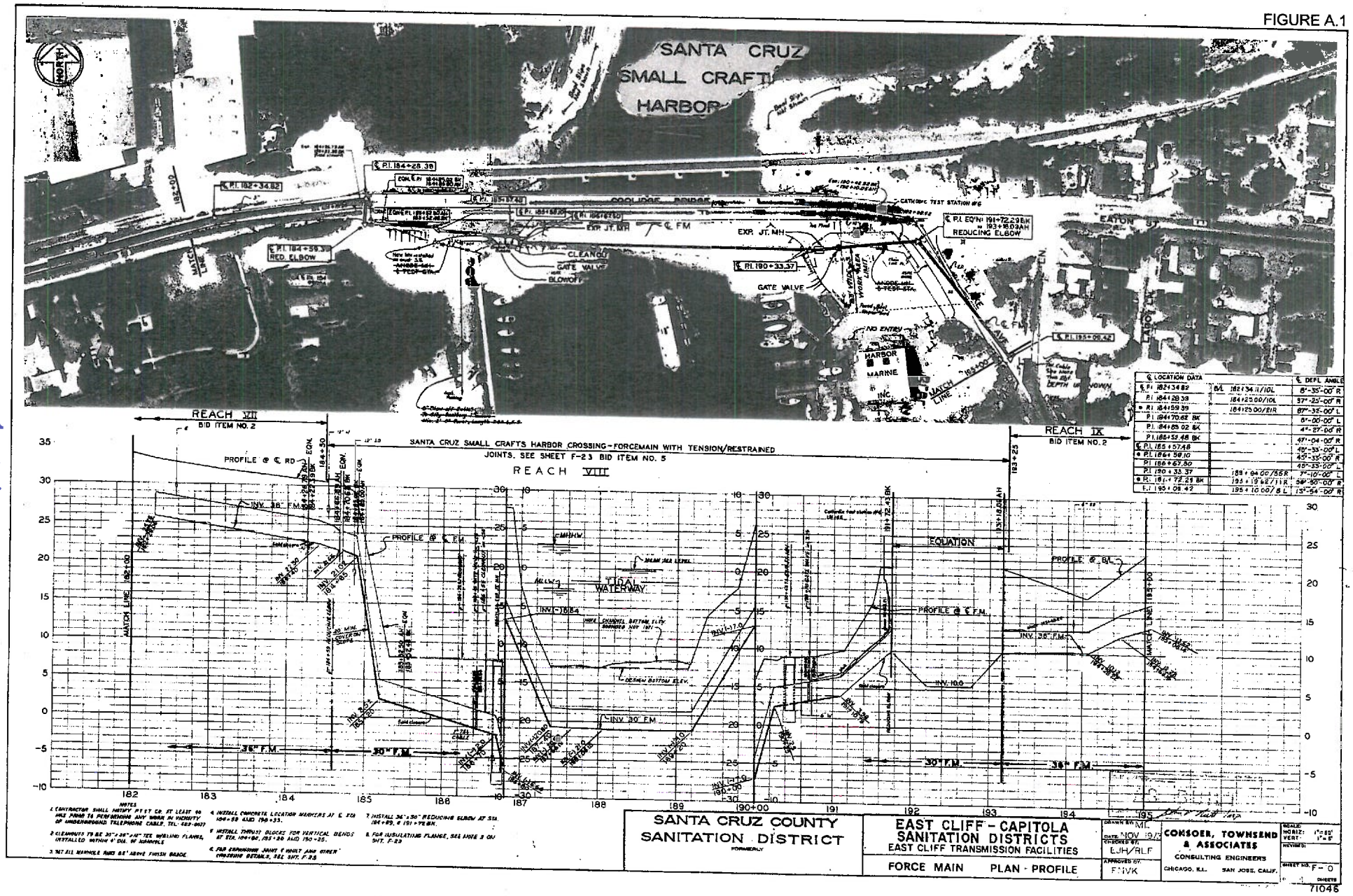
SANTA CRUZ SMALL CRAFT HARBOR
COOLIDGE BRIDGE
EXP. JT. MH.
℄ FM
CLEANOUT
GATE VALVE
BLOWOFF
GATE VALVE
CATHODIC TEST STATION #6
EXP. JT. MH.
REDUCING ELBOW
EATON ST.
NO ENTRY
HARBOR MARINE INC.
MATCH LINE
REACH VII
BID ITEM NO. 2
REACH VIII
REACH IX
BID ITEM NO. 2
SANTA CRUZ SMALL CRAFTS HARBOR CROSSING - FORCEMAIN WITH TENSION/RESTRAINED JOINTS. SEE SHEET F-23 BID ITEM NO. 5
PROFILE @ ℄ RD.
PROFILE @ ℄ F.M.
PROFILE @ B/L
TIDAL WATERWAY
EQUATION
INV. 36" F.M.
INV. 30" F.M.
36" F.M.
30" F.M.
DESIGN BOTTOM ELEV.
MATCH LINE
NOTES
1. CONTRACTOR SHALL NOTIFY PG & E CO. AT LEAST 48 HRS PRIOR TO PERFORMING ANY WORK IN VICINITY OF UNDERGROUND TELEPHONE CABLE. TEL. 423-0627
2. ELEMENTS 79 & 82 36"x36"x18" TEE, WELDING FLANGE, INSTALLED WITHIN 6' DIA. OF MANHOLE
3. SET ALL MANHOLE RIMS 6.5' ABOVE FINISH GRADE
4. INSTALL CONCRETE LOCATION MARKERS AT ℄ STA 184+59 AND 196+33.
5. INSTALL THRUST BLOCKS FOR VERTICAL BENDS AT STA. 184+86, 185+28 AND 190+25.
6. FOR EXPANSION JOINT & VAULT AND OTHER CONDUIT DETAILS, SEE SHT. F-23
7. INSTALL 36"x36" REDUCING ELBOW AT STA. 184+89, & 191+72 BK.
8. FOR INSULATING FLANGE, SEE NOTE 3 ON SHT. F-23
SANTA CRUZ COUNTY SANITATION DISTRICT
FORMERLY
EAST CLIFF - CAPITOLA SANITATION DISTRICTS
EAST CLIFF TRANSMISSION FACILITIES
FORCE MAIN PLAN - PROFILE
DATE NOV 19/2
CHECKED BY EJH/RLF
APPROVED BY FMVK
COMSOER, TOWNSEND & ASSOCIATES
CONSULTING ENGINEERS
CHICAGO, ILL. SAN JOSE, CALIF.
SCALE: HORIZ. 1"=20' VERT. 1"=5'
REVISED:
SHEET NO. F-0
SHEETS
71046

Table A1 - Estimate of Construction Costs for Alternative 1

Project: Murray St Bridge Force Main
Description: Engineer's Preliminary Opinion of Probable Construction Costs
Alternative 1 - 36" C200 Steel

Date Created: 2/23/2016
Date Updated: 3/31/2016
Prepared By: DRG
Checked By: DTK

Item	Description	Quantity	Unit	Material & Installation Unit Cost	Total
MOBILIZATION AND DEMOBILIZATION					
1	Mobilization	1	LS	$ 50,000.00	$ 50,000.00
2	Demobilization	1	LS	$ 25,000.00	$ 25,000.00
	SUBTOTAL				**$ 75,000.00**
SHEETING SHORING AND BRACING					
3	Sheeting, Shoring, and Bracing	1	LS	$ 100,000.00	$ 100,000.00
	SUBTOTAL				**$ 100,000.00**
PIPELINE AND APPURTENANCES					
4	36" ID C200 Pipe material (incl. fittings)	875	LF	$ 300.00	$ 262,500.00
5	Exterior painting	1	LS	$ 15,000.00	$ 15,000.00
6	SCAV assembly	1	EA	$ 6,000.00	$ 6,000.00
7	Blowoff assembly	2	EA	$ 4,000.00	$ 8,000.00
8	36" Isolation valve in vault	2	EA	$ 90,000.00	$ 180,000.00
9	Accessway for Maintenance/Monitoring	2	EA	$ 15,000.00	$ 30,000.00
10	Restrained Joints	20	EA	$ 2,500.00	$ 50,000.00
	SUBTOTAL				**$ 551,500.00**
STRUCTURAL					
11	Pipe supports	10	EA	$ 3,000.00	$ 30,000.00
12	Steel truss supports	4	EA	$ 6,000.00	$ 24,000.00
13	Steel truss	2	LS	$ 150,000.00	$ 300,000.00
	SUBTOTAL				**$ 354,000.00**
SERVICES					
14	Crane	1	LS	$ 50,000.00	$ 50,000.00
15	Traffic Control	1	LS	$ 30,000.00	$ 30,000.00
16	Railroad Flagging	1	LS	$ 75,000.00	$ 75,000.00
	SUBTOTAL				**$ 155,000.00**
ADDITIONAL ITEMS					
17	Potholing	1	LS	$ 10,000.00	$ 10,000.00
18	Pipeline testing	1	LS	$ 5,000.00	$ 5,000.00
19	Existing pipeline fill and abandonment	1	LS	$ 100,000.00	$ 100,000.00
20	Record Drawings	1	LS	$ 10,000.00	$ 10,000.00
	SUBTOTAL				**$ 125,000.00**
CONTINGENCY					
21	20% Contingency				$ 272,100.00
	TOTAL				**$ 1,632,600.00**

Table A2 - Estimate of Construction Costs for Alternative 2

Project: Murray St Bridge Force Main
Description: Engineer's Preliminary Opinion of Probable Construction Costs
Alternative 2 - 36" ID HDPE / 48" ID Steel encasement

Date Created: 2/23/2016
Date Updated: 3/31/2016
Prepared By: DRG
Checked By: DTK

Item	Description	Quantity	Unit	Material & Installation Unit Cost	Total
MOBILIZATION AND DEMOBILIZATION					
1	Mobilization	1	LS	$ 60,000.00	$ 60,000.00
2	Demobilization	1	LS	$ 30,000.00	$ 30,000.00
	SUBTOTAL				**$ 90,000.00**
SHEETING SHORING AND BRACING					
3	Sheeting, Shoring, and Bracing	1	LS	$ 100,000.00	$ 100,000.00
	SUBTOTAL				**$ 100,000.00**
PIPELINE AND APPURTENANCES					
4	36" ID HDPE Pipe material (incl. fittings)	875	LF	$ 250.00	$ 218,750.00
5	48" ID C200 Pipe material (incl. fittings)	875	LF	$ 400.00	$ 350,000.00
6	Exterior painting	1	LS	$ 15,000.00	$ 15,000.00
7	SCAV assembly	1	EA	$ 6,000.00	$ 6,000.00
8	Blowoff assembly	2	EA	$ 4,000.00	$ 8,000.00
9	36" Isolation valve in vault	2	EA	$ 115,000.00	$ 230,000.00
10	Accessway for Maintenance/Monitoring	2	EA	$ 20,000.00	$ 40,000.00
11	Restrained Joints	20	EA	$ 2,500.00	$ 50,000.00
	SUBTOTAL				**$ 917,750.00**
STRUCTURAL					
12	Pipe supports	10	EA	$ 4,000.00	$ 40,000.00
13	Steel truss supports	4	EA	$ 8,000.00	$ 32,000.00
14	Steel truss	2	LS	$ 150,000.00	$ 300,000.00
	SUBTOTAL				**$ 372,000.00**
SERVICES					
15	Crane	1	LS	$ 50,000.00	$ 50,000.00
16	Traffic Control	1	LS	$ 35,000.00	$ 35,000.00
17	Railroad Flagging	1	LS	$ 75,000.00	$ 75,000.00
	SUBTOTAL				**$ 160,000.00**
ADDITIONAL ITEMS					
18	Potholing	1	LS	$ 10,000.00	$ 10,000.00
19	Pipeline testing	1	LS	$ 5,000.00	$ 5,000.00
20	Existing pipeline fill and abandonment	1	LS	$ 100,000.00	$ 100,000.00
21	Record Drawings	1	LS	$ 10,000.00	$ 10,000.00
	SUBTOTAL				**$ 125,000.00**
CONTINGENCY					
22	20% Contingency				$ 352,950.00
	TOTAL				**$ 2,117,700.00**